Model 60

60-115V-PS-P4, 60-115V-EC, 60-115V-EL
60-230/277V-PS-P4, 60-230/277V-EC, 60-230/277V-EL

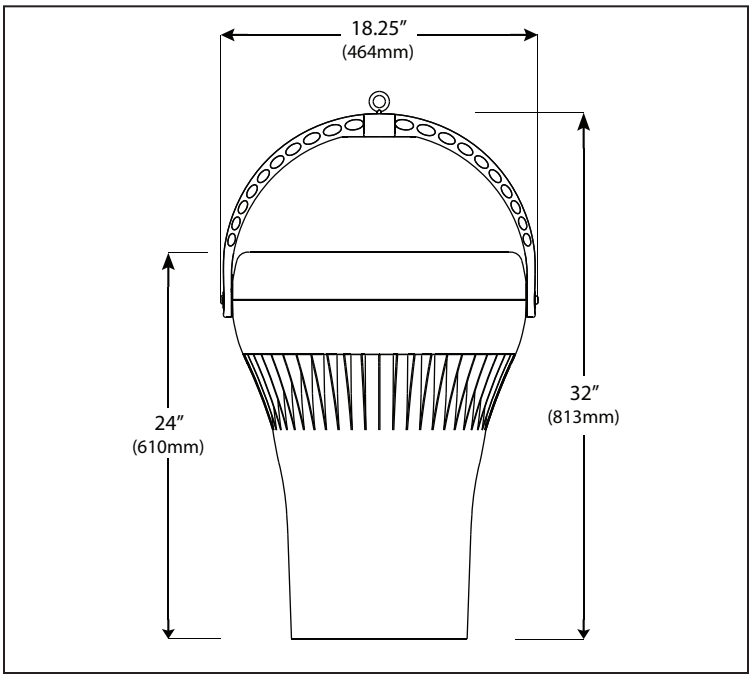

MODEL 60 FEATURES

DESCRIPTION

- *De-stratification Fan/Air turbine*
- *Designed to deliver columnar laminar flow of air from ceiling to floor*

USES

- *Used to de-stratify/thermally equalize buildings*
- *Used to equalize humidity*
- *Used to increases thermal comfort during summer and winter*
- *Used to reduce ceiling temperature to extend life of lighting ballasts*
- *Optional accessories to adapt unit to varying requirements and conditions*

ATTRIBUTES AND CHARACTERISTICS

- *Columnar laminar flow*
- *Easy installation*
- *Small amp draw*
- *Quiet & energy efficient operation*
- *Free hanging, unit can be angled up to 90˚ off vertical*
- *Long throw*

SELECTION

- *Reduce energy consumption up to 30% or more*
- *0 to 170 watt Energy efficient operation*
- *Capable of Temperature balance within 0˚ to 3˚ F*
- *Mounting height up to 60 feet*
- *Contact manufacturer for a selection consultation*

SUSTAINABILITY

- *Meets LEED EA Credit - Optimize Energy Performance*
- *Made from recyclable resin*
- *Recyclable corrugated packaging*

CODE APPROVAL

- *Conforms to Underwriters Laboratories Standard 507 for Safety Electric Fans*
- *Edison Testing Laboratories certified fan and components*
- *5VA flame resistance rating*
- *RoHS compliant*

PERFORMANCE

- *Standard model capable of covering up to 2000 ft² or a 50 ft coverage diameter*
- *Capable of temperature control within 0˚ to 3˚ F with proper array/density of units*
- *Performance and results of the Air Pear are subject to many variables such as, but not limited to, the interior environment, exterior environment, conditions of building structure, HVAC system performance and/or electrical service and thus actual results may vary*

SHIPPING & HANDLING

- *Product will ship based on availability, contact manufactuer or reseller*
- *All products are shipped FOB factory*

WARRANTY

- *Warranty offered - 3-year from shipping date*
- *Money back guarantee - 30 days*
- *Refurbish program after 3-year warranty period*

Airius LLC, ©2011. All Rights Reserved.

LIMITATIONS

- *Should not mount over 60 feet*
- *Do not install in environments open to the elements (contact manufacturer)*

SAFETY PRECAUTIONS

- *Seismic restraint point for earthquake codes provided*
- *Thermal overload protection provided*
- *Always hold the Air Pear by the bail/crosspice to avoid injury from moving parts*

AVAILABILITY

- *Available across North, Central, and South America*
- *Available across UK, EU, and Middle East*
- *Available across Mediterranean*
- *Available across Oceania*

COST

- *Consult manufacturer sales offices or reseller for specific product costs*

MODEL 60 PROPERTIES

MATERIALS, DIMENSIONS & PROPERTIES

HOUSING

	Standard
Weight:	22 lbs (10 kgs)
Height to Rim:	24 in (610 mm)
Total Height:	32 in (813 mm)
Diameter:	18.25 in (464 mm)

PS-P4 MOTOR

	115V	230	277V
Watts* @ 50/60 htz:	88/108	120/150	170
RPM* @ 50/60 htz:	1400/1620	1390/1600	1660
CFM* @ 50/60 htz (m3/hr):	1443/1665 (2451/2828)	1667/1902 (2832/3231)	2002 (3401)
AMPS* @ 50/60 htz:	.91/.92	.57/.66	0.68

*Motor data provided by motor manufacturer and is subject to change at anytime

EC/EL MOTOR

	115V	230/277V
Watts* @ 50/60 htz:	0 - 170	0 - 170
RPM* @ 50/60 htz:	0 - 1660	0 - 1630
CFM* @ 50/60 htz (m3/hr):	0 - 1825 (0 - 3100)	0 - 1770 (0 - 3007)
AMPS* @ 50/60 htz:	0 - 2.2	0 - 1.3

*Motor data provided by motor manufacturer and is subject to change at anytime

- *Proudly made in the USA*
- *Constructed from recyclable materials*
- *The outer shell and stator are fire rated 5VA materials*
- *Power cord is a 3 wire 18 AWG (or 16 AWG) 300VAC rated electrical cord, UL rated in North America as SJT or for CE/EU compliance rated as HO5VV*
- *115VAC version comes with molded three prong plug*
- *230/277VAC versions do not have a plug supplied*
- *All model 60 motors are sourced by EBM PAPST*
- *PSC - Permanent Split Capacitor motor*
- *EC - Electrically Commutated, 92% efficient motor*
- *EL - Electrically Commutated, 92% efficient, AiriusNET Enabled motor*
- *Motor is thermally protected. Shutoff is at 275˚ F (135˚ C) & reset is at 255˚ F (125˚ C)*
- *0 - 68 dB(A)**
- *No lubrication required. Bearings are sealed*

ACCESSORIES & OPTIONS

- *Available in single phase 115/230/277VAC*
- *Air Pear speed control - TRIAC speed control to adjust top end RPM (PSC) or Potentiometer to alter 0-10VDC control (EC)*
- *Building management systems can vary speed of EC based on a 0-10VDC*
- *AiriusNET (only available with EL models) - Individually addressable Fan management system Requires a browser enabled computer*
- *Wireless - EL models have a wireless option to eliminate control wires*
- *Colors: PMS Cool Grey 2C or PMS Grey 432C*

Airius LLC, ©2011. All Rights Reserved.

MODEL 60 PLACEMENT

PREPARATION

- *Install electrical circuit(s) and outlet(s) in accordance with national and local electric codes*
- *Outlets should generally be mounted vertically unless a "twist/locking" type is being used*
- *Wall switch may be installed in circuit to disable power and prevent electrical hazards when servicing*
- *Confirm electrical continuity of Air Pear on the ground before permanently mounting in the ceiling*

INSTALLATION

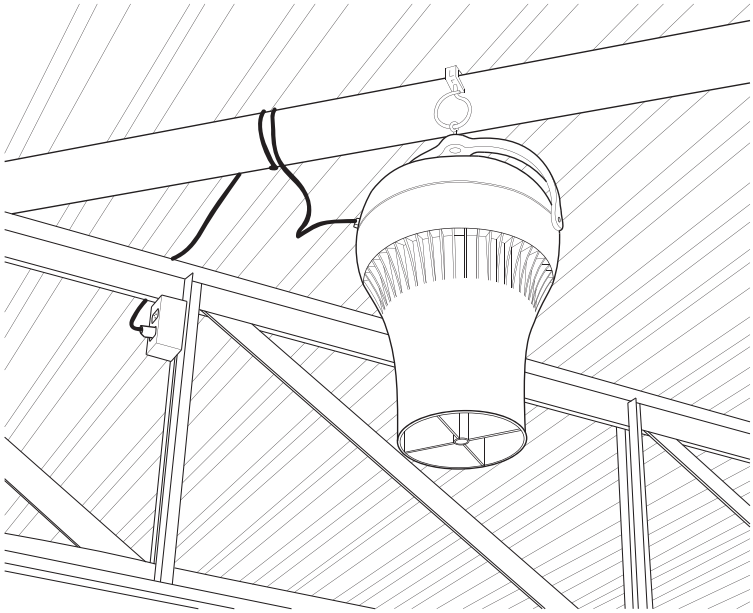

- *Hang vertically as high in the ceiling as possible Typically 12 - 18 inches from the roof deck to intake*
- *The Air Pear performs best when installed such that the air column/exhaust from the nozzle is unimpeded to the floor*
- *Use professionally installed hardware, capable of supporting a minimum of five times the weight*
- *Hardware to hang the unit includes but is not restricted to: Hooks, chains, cables, carabiners, bridle rings, beam clamps and bolts*
- *Density of the placement is directly related to the effectiveness, performance and savings*

Airius LLC, ©2011. All Rights Reserved.

- *Floor plans, mezzanines, office locations, machinery, people placement, plumbing, lighting, duct work, electrical systems, natural light/air systems, cranes, doors, windows, ventilation and fire suppression systems are all factors in properly locating the Air Pear system within the ceiling*

COVERAGE

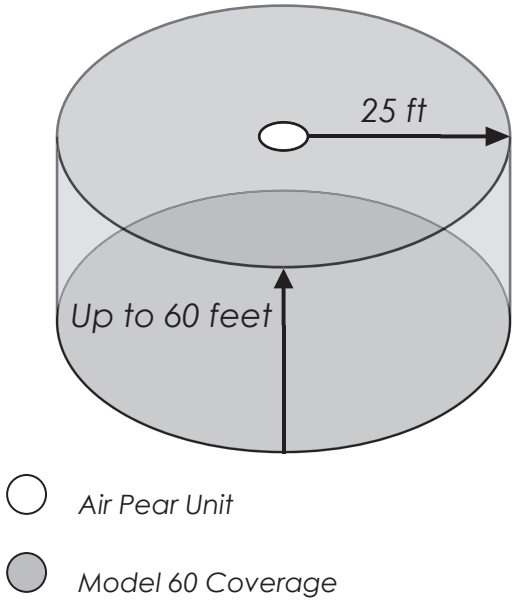

- *All model 60 capable of covering up to 2000 ft² or a 50 ft coverage diameter with a mounting height up to 60 ft*

OPERATION

- *Designed to operate 24 hours-a-day, 7 days-a-week to maintain thermal equalization/humidity equalization*
- *Use optional speed control to fine tune RPM if needed*
- *Use optional LISA software to manage EL fans via control wires or upgrade to wireless*

MAINTENANCE

- *Frequency of cleaning will vary by application and environment*
- *You may clean the plastic housing with a damp warm cloth, using mild household detergents*
- *Do not use petroleum products, thinners or solvents to clean any part of the Air Pear*
- *If the Air Pear system fails, contact manufacturer*

MANUFACTURER & RESELLERS

- *USA and International:*
  AIRIUS, LLC (Manufacturer)
  811 South Sherman Street
  Longmont, Colorado 80501 - USA
  Telephone: 303.772.2633
  Fax: 303.772.8276
  Web: www.theairpear.com

- *UK/Europe/Middle East:*
  AIRIUS Europe Ltd. (Exclusive Importer)
  57 Wimborne Road, Bournemouth,
  Dorset BH3 7AL - UK
  Telephone: (44) 1202 554200
  Fax: (44) 1202 554396
  Web: www.airius.co.uk

CLASSIFICATION

- *MasterFormat: HVAC Axial Fans - 23 34 13*
  Ceiling Fans - 11 34 00
  Air Curtains - 23 34 33
  Commercial Ceiling Fans - 23 34 70

May be covered by one or more of the following United States Patents: 7,381,129 B2; D514688 and other patents pending

AIRIUS®, AIR PEAR®, and THE THERMAL EQUALIZER® are trademarks of Airius, LLC, registered in the U.S. and in some countries abroad. Other trademarks pending in the U.S. and abroad.

Airius LLC, ©2011. All Rights Reserved.

PC/ABS