BALDOR
A MEMBER OF THE ABB GROUP

BALDOR • RELIANCE

Product Information Packet

M3608

2HP,3450RPM,3PH,60HZ,184,3524M,TEFC,F1

Copyright © All product information within this document is subject to Baldor Electric Company copyright © protection, unless otherwise noted.

Part Detail

Revision:	G	**Status:**	PRD/A	**Change #:**		**Proprietary:**	No
Type:	AC	**Prod. Type:**	3526M	**Elec. Spec:**	35WGT962	**CD Diagram:**	CD0005
Enclosure:	TEFC	**Mfg Plant:**		**Mech. Spec:**	35L108	**Layout:**	35LYL108
Frame:	184	**Mounting:**	F1	**Poles:**	02	**Created Date:**	04-30-2010
Base:	RG	**Rotation:**	R	**Insulation:**	B	**Eff. Date:**	09-05-2014
Leads:	9#18					**Replaced By:**	
Literature:		**Elec. Diagram:**					

BALDOR
A MEMBER OF THE ABB GROUP

Nameplate NP1256L							
CAT.NO.	M3608						
SPEC.	35L108T962H1						
HP	2						
VOLTS	208-230/460						
AMP	5.6-5.2/2.6						
RPM	3450						
FRAME	184	HZ	60	PH	3		
SER.F.	1.15	CODE	L	DES	B	CLASS	B
NEMA-NOM-EFF	84	PF	88				
RATING	40C AMB-CONT						
CC	010A	USABLE AT 208V	5.6				
DE	6206	ODE	6203				
ENCL	TEFC	SN					

BALDOR A MEMBER OF THE ABB GROUP

AC Induction Motor Performance Data

Record # 9718 - Typical performance - not guaranteed values

Winding: 35WGT962-R001	**Type:** 3526M	**Enclosure:** TEFC

Nameplate Data				460 V, 60 Hz: High Voltage Connection	
Rated Output (HP)	2			Full Load Torque	3 LB-FT
Volts	208-230/460			Start Configuration	direct on line
Full Load Amps	5.6-5.2/2.6			Breakdown Torque	12.4 LB-FT
R.P.M.	3450			Pull-up Torque	7.6 LB-FT
Hz	60	Phase	3	Locked-rotor Torque	11 LB-FT
NEMA Design Code	B	KVA Code	L	Starting Current	24.3 A
Service Factor (S.F.)	1.15			No-load Current	1.1 A
NEMA Nom. Eff.	84	Power Factor	88	Line-line Res. @ 25ºC	7.86 Ω
Rating - Duty	40C AMB-CONT			Temp. Rise @ Rated Load	47°C
S.F. Amps				Temp. Rise @ S.F. Load	55°C
				Rotor inertia	0.0712 LF²

Load Characteristics 460 V, 60 Hz, 2 HP

% of Rated Load	25	50	75	100	125	150	S.F.
Power Factor	50	73	80	85	89	89	87
Efficiency	72.7	81.2	83.8	84.2	83.7	82.6	83.9
Speed	3563	3537	3507	3475	3440	3402	3454
Line amperes	1.3	1.6	2.1	2.6	3.1	3.7	2.9

BALDOR A MEMBER OF THE ABB GROUP

Performance Graph at 460V, 60Hz, 2.0HP Typical performance - Not guaranteed values

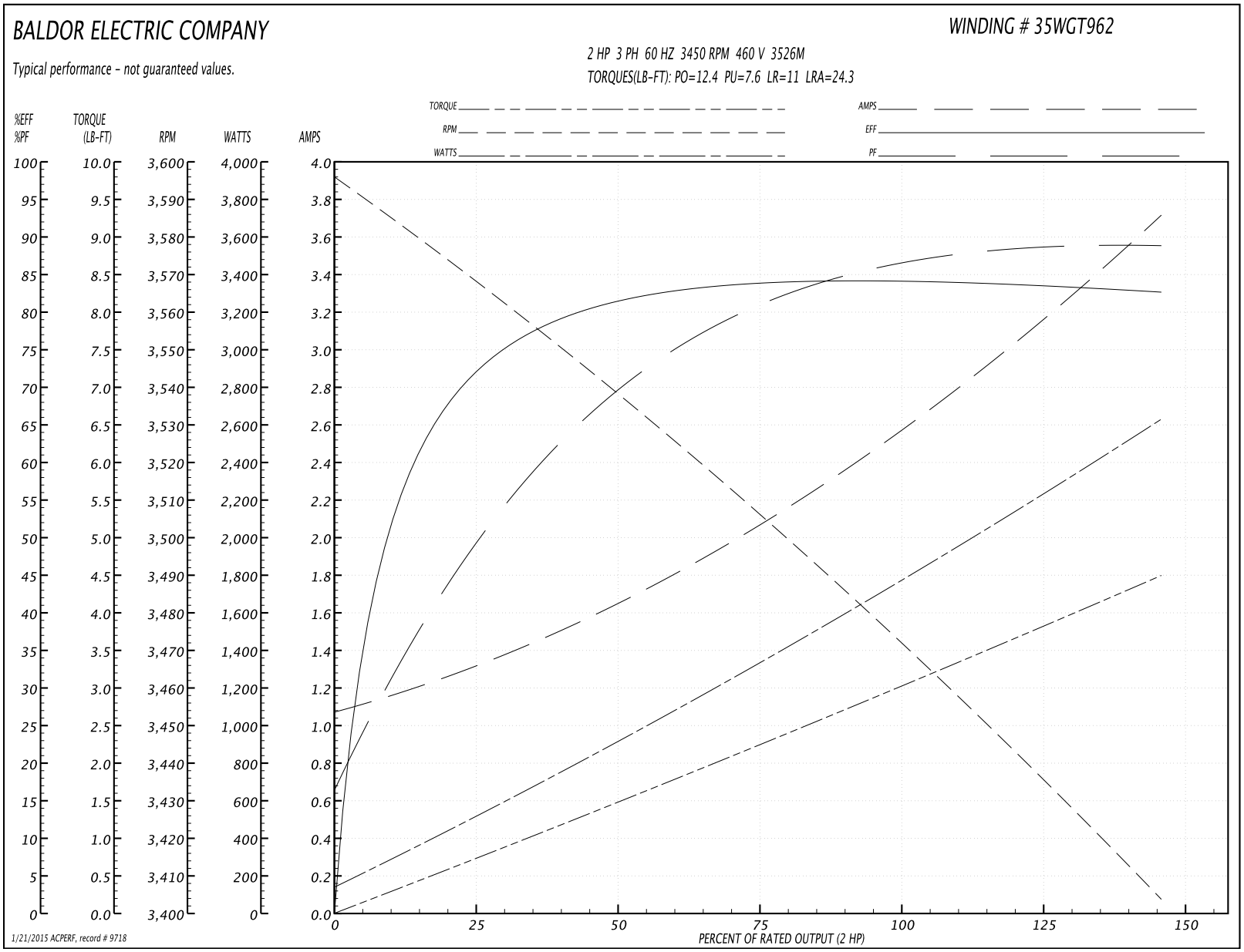

BALDOR A MEMBER OF THE ABB GROUP

AC Induction Motor Performance Data

Record # 20594 - Typical performance - not guaranteed values

Winding: 35WGT962-R008	**Type:** 3526M	**Enclosure:** TEFC

Nameplate Data				460 V, 60 Hz: High Voltage Connection	
Rated Output (HP)	2			Full Load Torque	3 LB-FT
Volts	208-230/460			Start Configuration	direct on line
Full Load Amps	5.6-5.2/2.6			Breakdown Torque	12.4 LB-FT
R.P.M.	3450			Pull-up Torque	7.6 LB-FT
Hz	60	Phase	3	Locked-rotor Torque	11 LB-FT
NEMA Design Code	B	KVA Code	L	Starting Current	24.3 A
Service Factor (S.F.)	1.15			No-load Current	1.1 A
NEMA Nom. Eff.	84	Power Factor	88	Line-line Res. @ 25ºC	7.86 Ω
Rating - Duty	40C AMB-CONT			Temp. Rise @ Rated Load	47°C
S.F. Amps				Temp. Rise @ S.F. Load	55°C
				Rotor inertia	0.0712 LF²

Load Characteristics 460 V, 60 Hz, 2 HP

% of Rated Load	25	50	75	100	125	150	S.F.
Power Factor	50	73	80	85	89	89	87
Efficiency	72.7	81.2	83.8	84.2	83.7	82.6	83.9
Speed	3563	3537	3507	3475	3440	3402	3454
Line amperes	1.3	1.6	2.1	2.6	3.1	3.7	2.9

BALDOR A MEMBER OF THE ABB GROUP

Performance Graph at 460V, 60Hz, 2.0HP Typical performance - Not guaranteed values

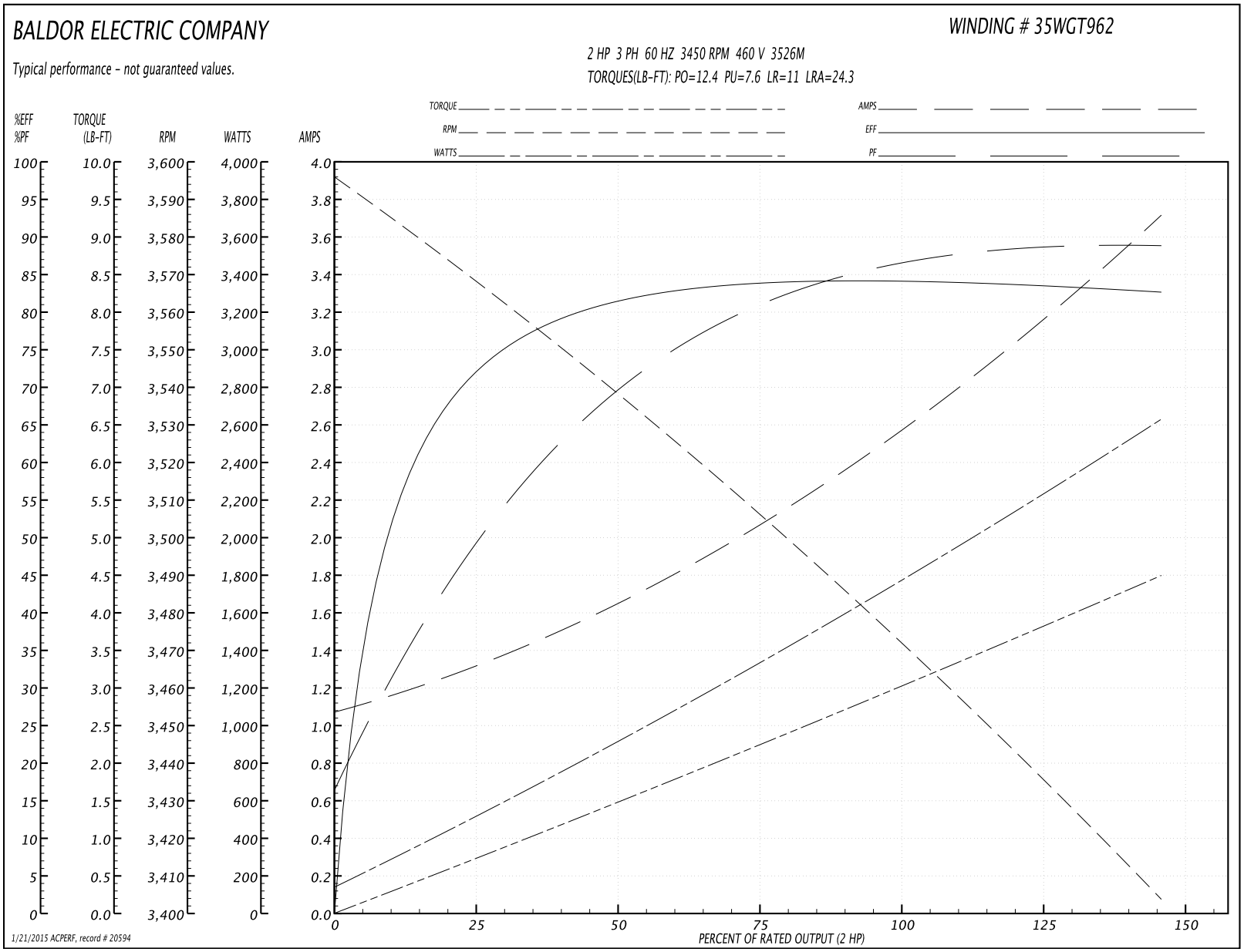

BALDOR
A MEMBER OF THE ABB GROUP

35LYL108

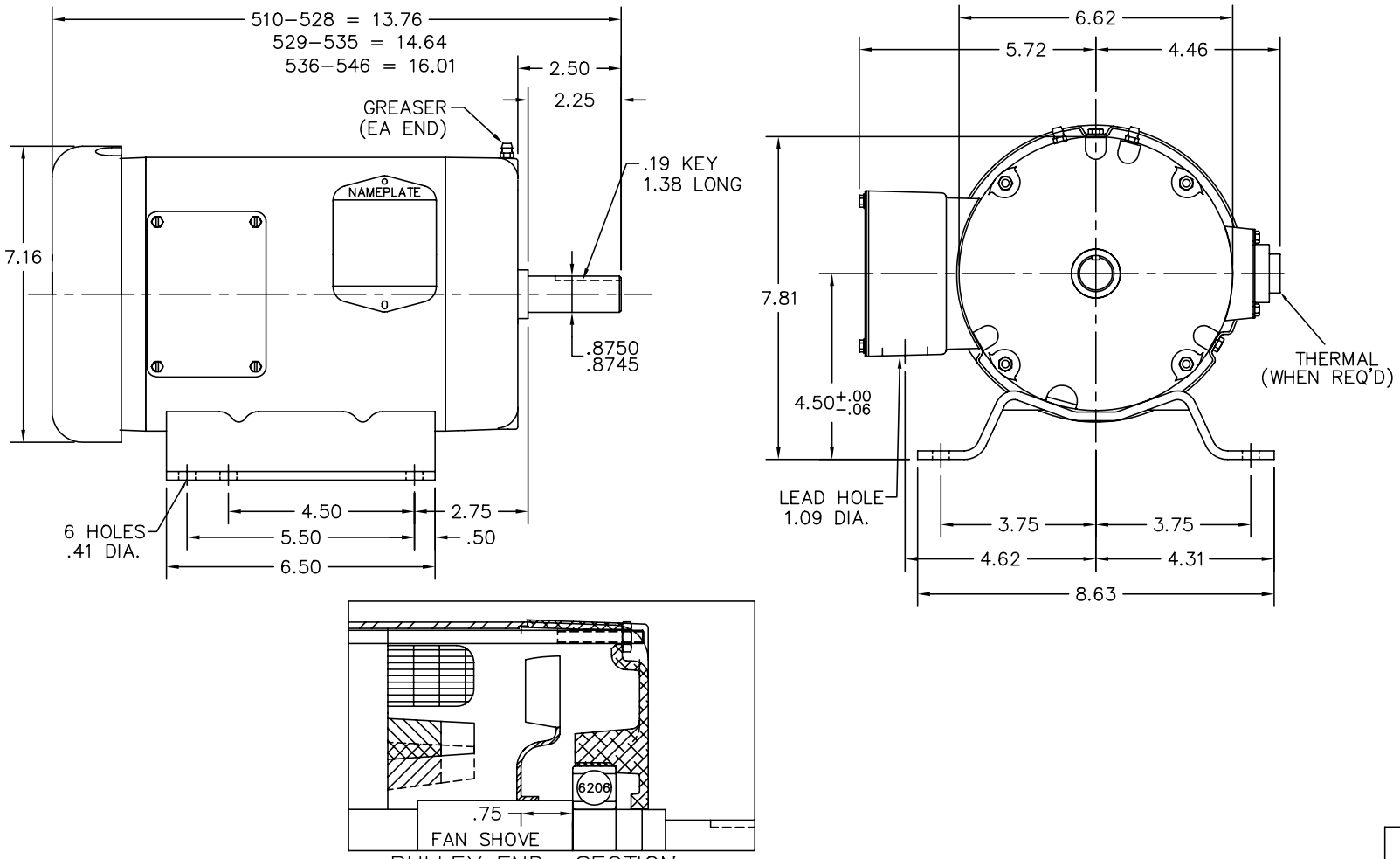

CUST. NAME		CUST. P.O.		CERTIFIED BY		MODEL		INSUL	AMB
H.P.	MTG	TYPE	R.P.M.	VOLTS		ENCL	PHASE	FREQ	FRAME
REV. DESC: SHAFT MATERIAL CHANGE, SEE EC09 FOR MORE						BALDOR ELECTRIC Co.			
REV. LTR: F	BY: JED	REVISED: 08/17/99 7:21		TDR: 0188121					
35LYL108		FILE: AAA00013542		MDL: –		STD HORZ 182–4 TEFC 35M			
		MTL: –							

35LYL108

BALDOR A MEMBER OF THE ABB GROUP

CD0005

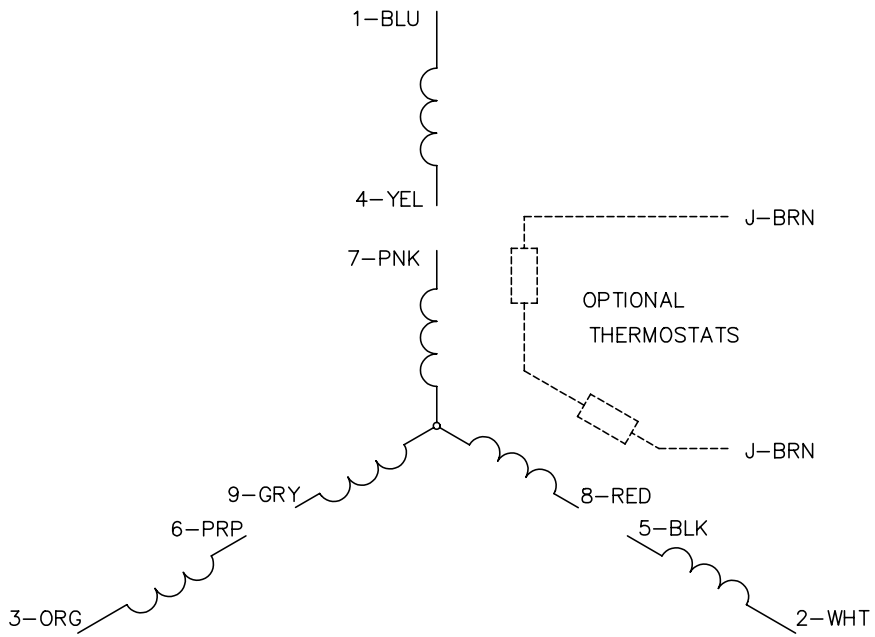

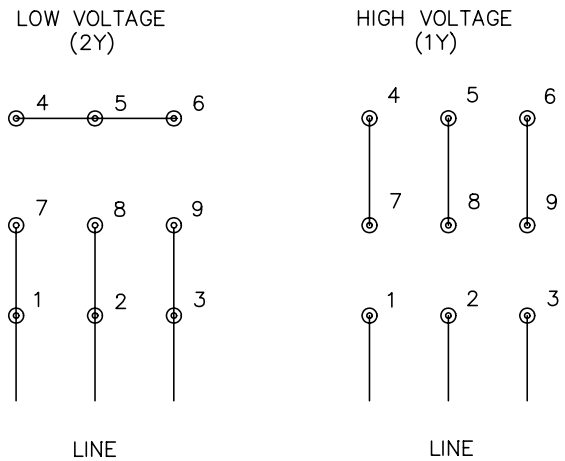

NOTES:

1. INTERCHANGE ANY TWO LINE LEADS TO REVERSE ROTATION.
2. OPTIONAL THERMOSTATS ARE PROVIDED WHEN SPECIFIED.
3. ACTUAL NUMBER OF INTERNAL PARALLEL CIRCUITS MAY BE A MULTIPLE OF THOSE SHOWN ABOVE.
4. LEAD COLORS ARE OPTIONAL. LEADS MUST ALWAYS BE NUMBERED AS SHOWN.

REV. DESC: REVISE TO SHOW OPTIONAL COLORS			
REV. LTR: E	BY: JLP	REVISED: 01/19/99 10:15	TDR: 0171435
CD0005		FILE: AAA00005140	MDL: –
		MTL: –	

BALDOR ELECTRIC Co.

3PH, DV, 9 LEADS

CD0005

BALDOR
A MEMBER OF THE ABB GROUP