SAFETY BARRIER GATE TRANSMITTAL

R1-08-2015

NORDOCK®

DEDICATED PEOPLE - SUPERIOR PRODUCTS

405 LAKE ROAD, UNIT 2
BOWMANVILLE, ON L1C 4P8
T: 905-697-4276 F: 905-697-6422
www.nordockinc.com

DATE:	EMAIL:
SALES PERSON:	QUOTED BY:
PHONE:	FAX:

BILL TO:	SHIP TO: SAME AS BILLING ADDRESS ☐	END USER:

P.O. #:	REQUEST SHIP DATE:	SHIP VIA:	WEIGHT	PPD ☐	COL ☐	3RD ☐

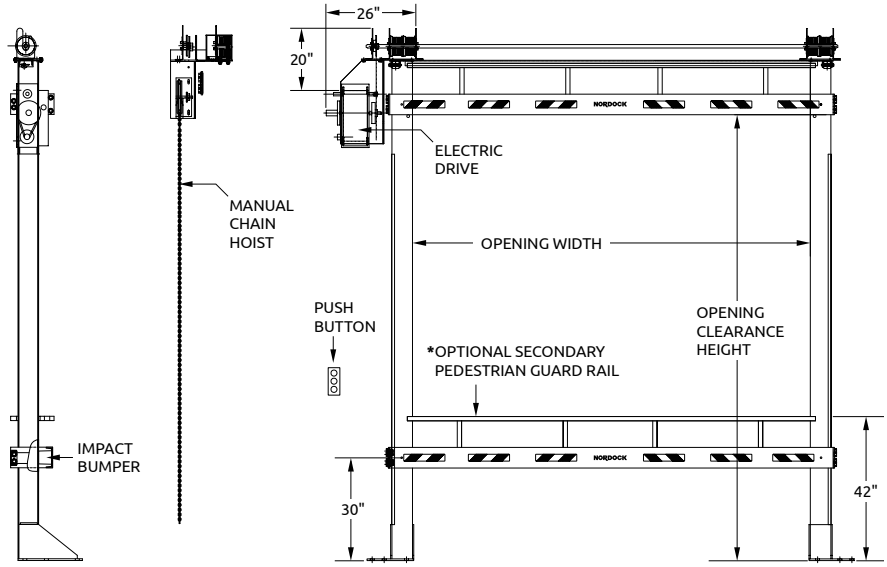

FEATURE SUMMARY

- Full Height Columns
- Counter Balance System
- Energy Absorbing Impact Bumpers
- Withstands Impacts of 10,000 lbs. at 4MPH
- Protects Overhead Door Panel and Tracks
- Manual or Powered Models
- High Visibility Yellow
- Optional Secondary Pedestrian Guard Rail

***INCREASE OVERHEAD CLEARANCE**

DOCK CROSS SECTION

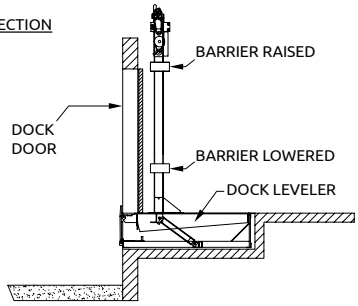

BASE PLATE

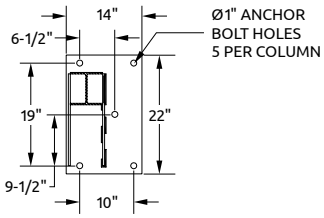

LIST PRICE

MODEL SPECIFICATION: _____ ☐ MSG (MANUAL) ☐ ASG (POWERED) **QUANTITY:** _____

DOOR SPECIFICATIONS: DOOR WIDTH: _____" DOOR HEIGHT: _____" DISTANCE ABOVE DOOR OPENING: _____"

DRIVE LOCATION: ☐ LEFT HAND SIDE ☐ RIGHT HAND SIDE

VOLTAGE: ☐ SINGLE PHASE ☐ 120V ☐ 208V ☐ 240V

☐ THREE PHASE ☐ 208V ☐ 240V ☐ 480V ☐ 600V ☐ OTHER: _____

OPTIONS: ☐ HOT DIP GALVANIZING ☐ 3 PHASE OPERATOR ☐ INTERCONNECT (LOCKOUT)

☐ SECONDARY PEDESTRIAN GUARD RAIL* ☐ PHOTO EYE STOP SENSOR

☐ REMOTE CONTROL RADIO TRANSMITTER ☐ NEMA 4 OPERATOR & CONTROL PANEL

SPECIAL REQUIREMENTS:

LIST PRICE	
SPECIAL REQUIREMENTS	
TOTAL LIST EACH	
DISCOUNT (%)	
TOTAL DISCOUNT	
TOTAL NET EACH	
X QUANTITY	
SUB-TOTAL	
FREIGHT	
TAX AMOUNT ($)	
TOTAL	