DWG NO 4415950 | SH 1 OF 1

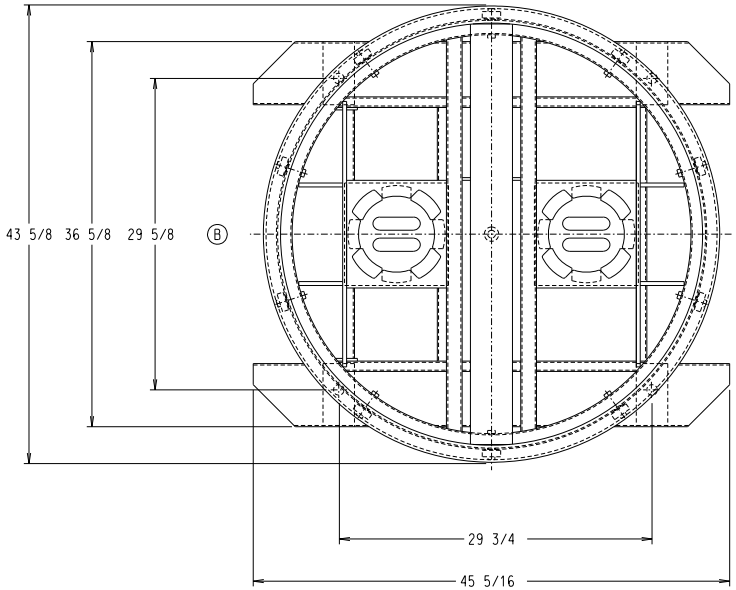

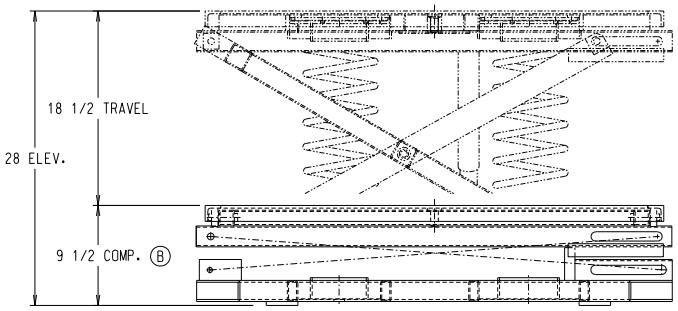

GENERAL DESCRIPTION

MODEL:PALLET PAL II
CAPACITY:400 TO 4400 LBS. DEPENDING ON SPRING COMBINATION
TURNTABLE RING:43 5/8 DIA.
BASE FRAME:36 5/8 X 45 1/4 W/FORK POCKETS
COMPRESSED HEIGHT:9 1/2
VERTICAL TRAVEL:18 1/2
EXTENDED HEIGHT:28
FINISH:TWO (2) COATS SOUTHWORTH RED & YELLOW MACHINERY ENAMEL

Ⓑ PARTS REFERENCE DRAWING C-60026027

THIS DRAWING MUST BE AT REVISION 'B'

3RD ANGLE PROJECTION

FRACTIONS ±1/8
.XXX ±.005
.XX ±.01
ANGLES ±.5°
UNLESS OTHERWISE SPECIFIED.
DIM ARE IN INCHES

ITEM	QTY	DESCRIPTION PARTS LIST	PART NO.

SOUTHWORTH

Southworth Products Corp.
P.O. Box 1380
Portland, Maine 04104-1380

DR JMS DATE 4-28-97
CK RPL DATE 4-11-02

REFERENCE | CAGE CODE 063Z8 | WT | SCALE 1/8 | MFG | DATE

MODEL: PALLET PAL II | TITLE: SA LOAD LEVELER SUB ASSY | SIZE C | DWG NO: 4415950 SHEET 1 OF 1 | REV B