NOTES :
1. CONVEYOR ROLLERS : 2.50" DIA ROLLERS @ 3.25" CENTERS, 52" EFFECTIVE WIDTH
2. CONVEYOR PASS HEIGHT : 18"
3. CONVEYOR SPEED : 30 FPM
4. ROTARY ARM SPEED : 12 RPM
5. MAX. LOAD SIZE : 48" W x 48" L x 80" H
6. MIN. LOAD SIZE : 30" W x 30" L x 26" H
7. LOAD WEIGHT : MIN. 200 LBS, MAX 4500 LBS.
8. POWER REQUIREMENT : 480/3/60 30 AMP
9. AIR SUPPLY : 6 CFM AT 80 PSI
10. MACHINE COLOR : STANDARD ORION GRAY

(FOR COMPLETE LIST OF NON-STANDARD ITEMS, SEE ORDER SPECIFICATION)

PLEASE NOTE: PRODUCTION SCHEDULE WILL NOT BE ASSIGNED UNTIL THE SIGNED APPROVAL DRAWING IS RETURNED TO ORION.

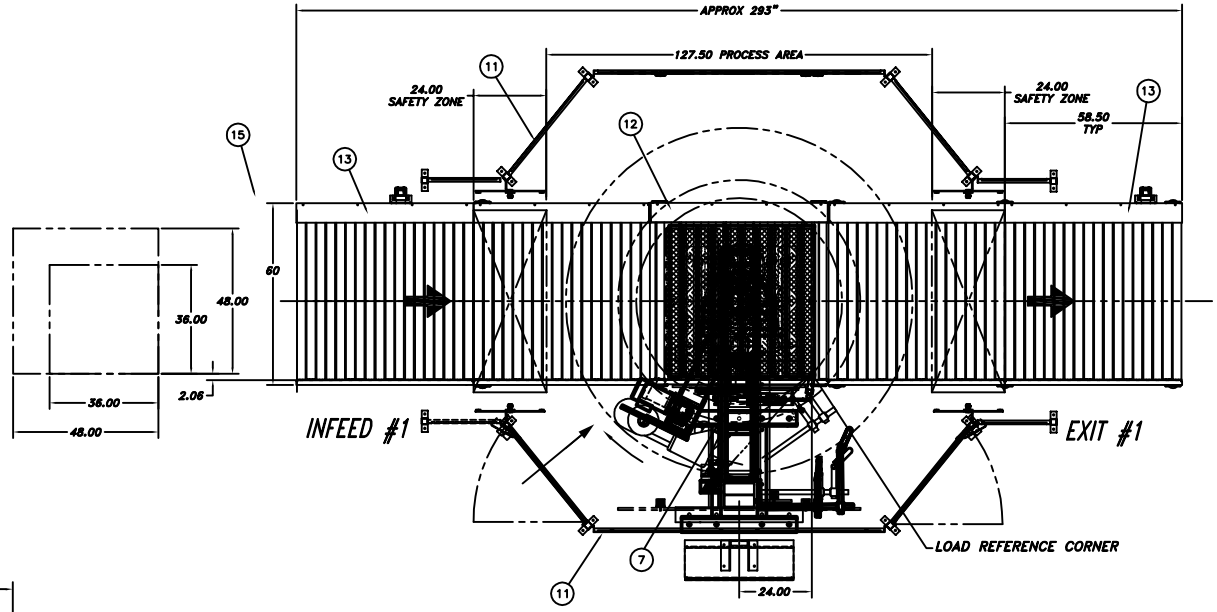

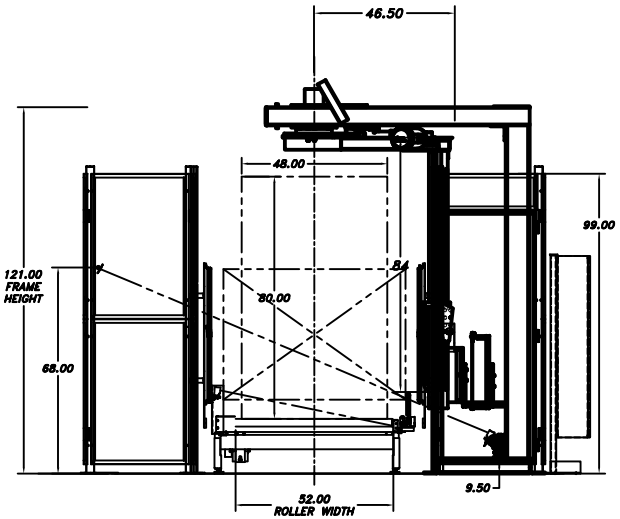

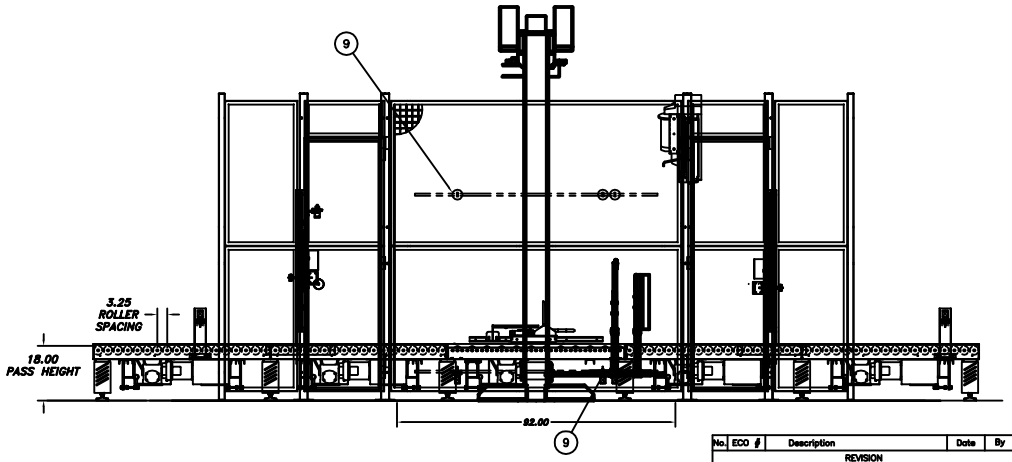

APPROVAL

SIGNATURE_____

DATE_____

MA-ST JOB MXXXXX
"CUSTOMER"

No.	ECO #	Description	Date	By
		REVISION		

12		4	ELITE CDLR CONV 6082 3.25 RS
11		1	SAFETY FENCE ASSY (CAT-2, 3FT DOOR)
10		2	CONVEYOR MOUNTED LOAD SENSOR
9		1	MA-ST POSITION LOAD SENSOR ASSY
8		1	FACTORY ENCLOSED SLIPRING ASSY (18 WIRE)
7		1	FOLDING FILM CLAMP ASSY W/BLOWER
6		1	FILM TAIL ASSY (LH)
5		1	30" INSTA-THREAD CARRIAGE (30AL)
4		1	MA-ST ROTARY ARM & DRIVE (STD)
3		1	MA-ST MAIN DRIVE ASSY (12 RPM)
1		1	MA-ST DRIVE SIDE FRAME WELDMENT

THIS DRAWING IS THE PROPERTY OF ORION PACKAGING SYS AND IS NOT TO BE USED OR REPRODUCED WITHOUT THEIR PERMISSION

Tolerances Unless Noted
DECIMAL .00 ± .01 .000 ± .005
FRACTIONAL ±1/32"
ANGULAR ± 1/2°

orion PACKAGING SYS.
4750 County Road 13 NE
Alexandria, MN 56308-9014

MA-ST LAYOUT FOR "CUSTOMER"
FLOW: LEFT TO RIGHT, 18" PH, 3.25 RS

DRAWN BY: DLS | APPROVED BY: | SCALE: 1:20 | DATE: 10/23/09

Notes: REMOVE ALL BURRS AND SHARP EDGES

Drawing No: MXXXXX-01

Surface Area: