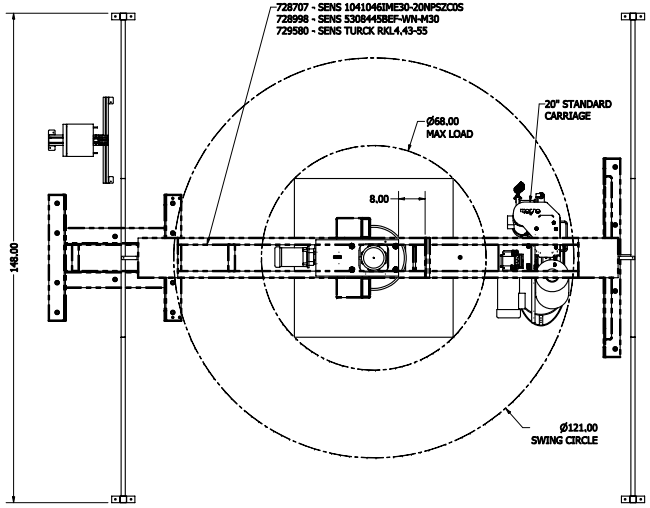

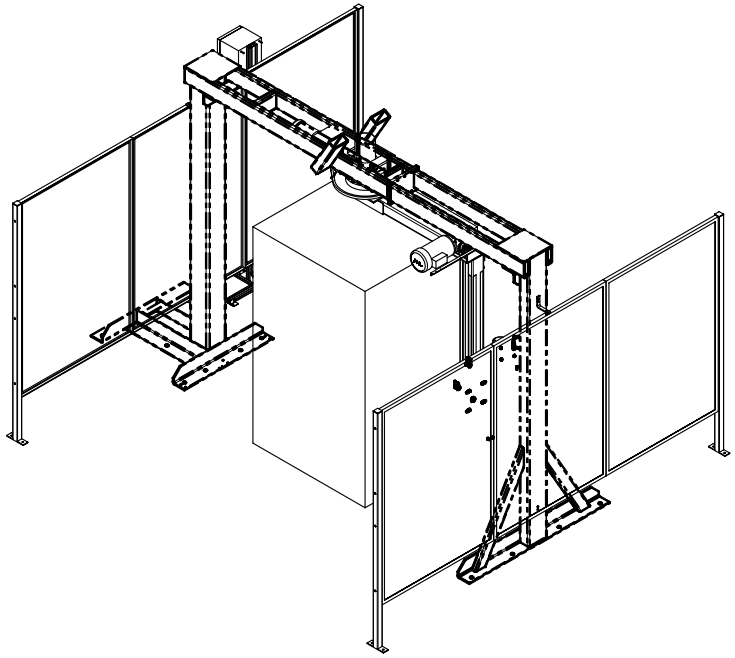

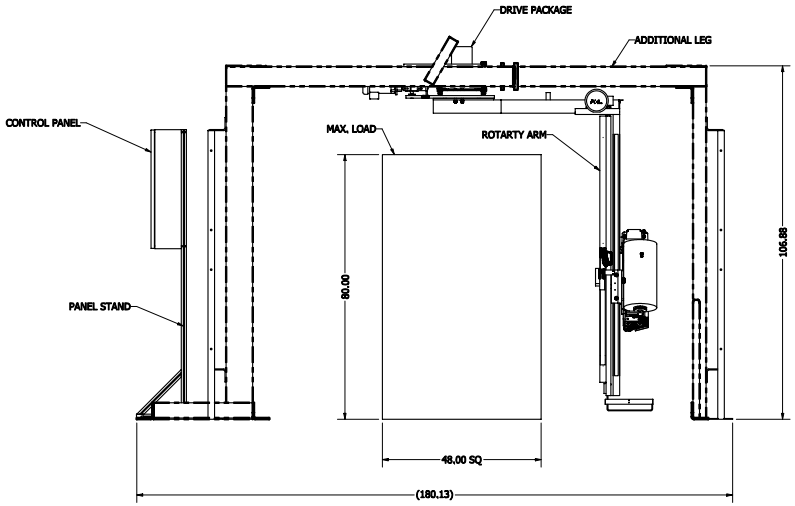

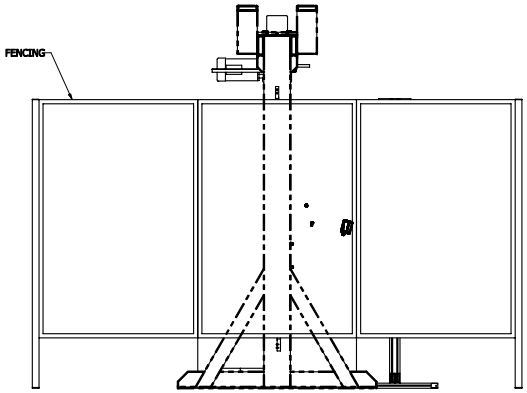

Parts List			
ITEM	QTY	PART NUMBER	DESCRIPTION
1	1	0252016	RT 80 IN BASE FRAME WELDMENT
2	1	0252015	RT STANDARD SLIP RING AND DRIVE ASSY
3	1	0252044	RT 80 IN ROTARY ARM TOWER ASSY
4	1	0253720	ROTARY TOWER INSTA THREAD FLR 20" CARRIAGE
5	1	0253059	RTA 80IN ADD ON LEG ASSY
6	1	0253117	RT SAFTY FENCE ASSY
7	1	0261601	Single Post Electrical Panel Stand (88")

DRAWN	Hilsgedahl	2/20/2009
CHECKED		
APPROVED		

Tolerances Unless Noted

Decimal	Angular	Fractional
.00 ± .01	± 1/2°	± 1/32"
.000 ± .005		

REMOVE ALL BURRS AND SHARP EDGES

ORION PACKAGING INC.
4750 County Road 13 NE
Alexandria, MN 56308-9014

THIS DRAWING IS THE PROPERTY OF BRIERTON ENGINEERING COMPANY AND IS NOT TO BE USED OR REPRODUCED WITHOUT THEIR PERMISSION

TITLE: RTD 48X48 STANDARD W/FENCING

REV	DESCRIPTION	DATE	BY
	REVISION		

SCALE	SURFACE AREA	DWG NO	FINISH
		RTD- 48X48X80 W-FENCE	