MATERIAL HANDLING SOLUTIONS

www.pflow.com
P 414 352 9000
F 414 352 9002
6720 N. Teutonia Ave.
Milwaukee, WI 53209

Customer:
Job Number:

MQ Series | Mechanical VRC 2-Post Cantilever

Installation Manual

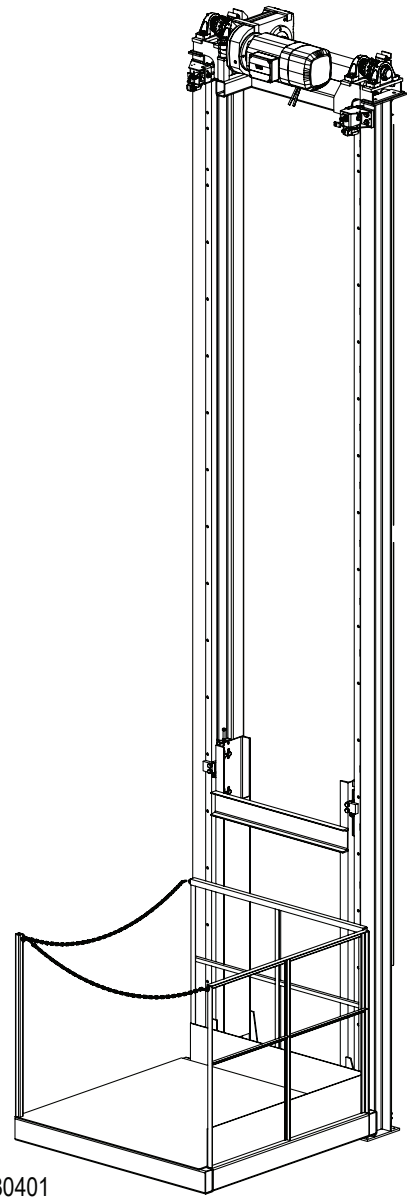

PFL-180401

Important:

Read this entire manual. Important safety information is included.

Before starting the installation, verify the job site dimensions and the dimensions of the delivered materials against the PFlow Industries, Inc. General Arrangement (GA) drawing.

The illustrations depicted in this manual are not to scale or detail. The illustrations are for reference only.

15705-6001 | Rev B | 2019-11-01 | Printed in the U.S.A.

Table of Contents

MATERIAL HANDLING SOLUTIONS

www.pflow.com
P 414 352 9000
F 414 352 9002
6720 N. Teutonia Ave.
Milwaukee, WI 53209

Description		Section | Page
1. Contact Information	15705-0011	1 | 1
2. General Information	15710-0004	2 | 1
Introduction		2 | 1
General Overview		2 | 1
Code Requirements		2 | 1
Parts		2 | 1
Service		2 | 1
Feedback		2 | 1
3. Warranty Information	15710-0014	3 | 1
Parts and Labor		3 | 1
Definitions		3 | 1
Warranty		3 | 1
Exclusions		3 | 1
Obligation		3 | 1
Liability		3 | 2
Warranty Procedures		3 | 2
Pre-Authorization		3 | 2
Invoices		3 | 2
4. Important Safety Information	15708-0200-01	4 | 1
Read the Entire Manual		4 | 1
Intended Purpose		4 | 1
Potential Risks and Possible Misuse		4 | 1
Safety Alert Symbols		4 | 1
Danger Statements		4 | 2
Warning Statements		4 | 2
Caution Statements		4 | 4
Electrical Safety Precautions		4 | 5
De-energize the Circuit		4 | 5
Electrical Safety Precautions		4 | 6
Working on Energized Circuits		4 | 6
Notes for the Installation Electrician		4 | 6
Entrance Below a Raised Carriage Deck	15709-0083	4 | 7
5. Glossary	15710-0018	5 | 1
Unique Descriptions and Names		5 | 1
Gate Types		5 | 8
Identifying Call Outs		5 | 9

Table of Contents

PFLOW INDUSTRIES MATERIAL HANDLING SOLUTIONS
www.pflow.com
P 414 352 9000
F 414 352 9002
6720 N. Teutonia Ave.
Milwaukee, WI 53209

Description		Section | Page
6. Equipment Arrival and Unpacking	15710-0006	6 | 1
Arrival		6 | 1
Inspection		6 | 1
Transportation Damage and Claims		6 | 1
Shipping Photograph Examples		6 | 2
Shipping Packet		6 | 3
Unpack the VRC		6 | 3
Return Materials Authorization (RMA)		6 | 3
Warranty Work		6 | 3
Recommended Tools		6 | 4
7. Pre-Installation Responsibilities	15710-0008	7 | 1
End User Responsibilities		7 | 1
End User and/or Mechanical and/or Electrical Installer Responsibilities		7 | 1
Mechanical Installer Responsibilities		7 | 2
Electrical Installer Responsibilities		7 | 2
8. Job Site General Arrangement (GA) Review	15710-0011	8 | 1
9. Frequently Asked Questions	15710-0011	9 | 1
10. Sequence of Installation		10 | 1
11. Placement	15705-6014	11 | 1
Verify Job Site Dimensions and Carriage Orientation		11 | 1
Mark Alignment		11 | 1
Position the Carriage		11 | 2
12. Column Setup	15705-6012	12 | 1
Purpose		12 | 1
Confirm the Orientation of Each Column		12 | 1
MQ Cantilever Configuration Column Guidelines		12 | 1
Spliced Column Guidelines		12 | 2
Assemble the Spliced Columns		12 | 2
Align the Spliced Column		12 | 3
Tack Weld the Spliced Column		12 | 3
Spliced Column Finish Welding Details		12 | 4
Raise and Secure the Column		12 | 5
Prepare the Upper Wheelblock		12 | 6
Insert the Wheelblocks		12 | 7
Attach the Upper Wheelblock		12 | 8
Attach the Lower Wheelblock		12 | 8

PFLOW INDUSTRIES MATERIAL HANDLING SOLUTIONS
www.pflow.com
P 414 352 9000
F 414 352 9002
6720 N. Teutonia Ave.
Milwaukee, WI 53209

Description		Section | Page
12. Column Setup (continued)		
Raise and Secure the 2nd Column		12 | 9
Verify the Guide Angle to Guide Angle Alignment		12 | 9
Align the Wheelblocks to the Guide Angle		12 | 10
Review the Columns for Plumb		12 | 10
Inspect the Oil Level in the Gear Motor		12 | 10
Install the Drivebase		12 | 11
Review the Columns		12 | 12
Install the Lift Chains		12 | 13
Adjust the Length of the Lift Chains		12 | 15
Level the Carriage		12 | 15
Install the Lift Chain Tensioner		12 | 16
Adjust the Turnbuckle		12 | 17
Position the Limit Switch Rod Arm		12 | 17
Review for Interference		12 | 17
Install the Slack Chain Sensor		12 | 18
Final Steps - Inspect and Verify		12 | 19
Reinstall the Chain Jump Guides		12 | 19
Adjust the Wheelblock Shoes		12 | 19
Tighten Bolts		12 | 19
Complete Field Welding		12 | 19
13. Bracing	15705-6013	13 | 1
Required Anchoring and Bracing Guidelines		13 | 1
Side-to-Side and Front-to-Back Bracing		13 | 2
Bracing Supplies		13 | 2
Anchoring Guidelines		13 | 3
Bracing Guidelines		13 | 4

Table of Contents

PFLOW INDUSTRIES MATERIAL HANDLING SOLUTIONS
www.pflow.com
P 414 352 9000
F 414 352 9002
6720 N. Teutonia Ave.
Milwaukee, WI 53209

Description		Section | Page
14. Two-Level Limit Switches	15705-6015	14 | 1
Two-Level Limit Switches		14 | 1
Install the U-Mount		14 | 1
Install the Lower Level Limit Switch		14 | 2
Install the Upper Level U-Mount		14 | 3
Install the Upper Level Limit Switch		14 | 3
Install the Overtravel Limit Switch		14 | 4
Finish Weld the Actuator, U-Mount, and all Unistrut Mounts		14 | 4
Three-Level or More Limit Switches		14 | 5
Three-Level or More Limit Switches		14 | 5
Install the U-Mount		14 | 5
Install the Lower Level Limit Switch		14 | 6
Install the Uppermost Level U-Mount		14 | 7
Install the Uppermost Level Limit Switch		14 | 7
Install the Overtravel Limit Switch		14 | 8
Install the Intermediate Level U-Mount		14 | 9
Install the Intermediate Floor Level Limit Switches		14 | 9
Finish Weld the Cam, U-Mount, and all Unistrut Mounts		14 |9

PFLOW INDUSTRIES MATERIAL HANDLING SOLUTIONS
www.pflow.com
P 414 352 9000
F 414 352 9002
6720 N. Teutonia Ave.
Milwaukee, WI 53209

Description		Section | Page
16. Gate Installation	15709-0005	16 | 1
Identify Components		16 | 1
Sliding Gate		16 | 2
Assemble the Sliding Gate		16 | 2
Install the Gate Post Extensions		16 | 3
Raise and Secure the Sliding Gate		16 | 4
Anchor the Gate Post Base Plates		16 | 4
Plumb and Square the Gate		16 | 4
Install Support Braces		16 | 4
Verify Gate Operation		16 | 4
Install the Gate Interlock		16 | 5
Verify the Gate Interlock Operation		16 | 5
Adjust the Interlock Keeper Assembly Magnet		16 | 5
Bi-Parting Swing Gate		16 | 6
Assemble the Bi-Parting Swing Gate		16 | 6
Install the Gate Post Extensions		16 | 7
Raise and Secure the Gate Assembly		16 | 8
Anchor the Gate Post Base Plates		16 | 8
Plumb and Square the Gate		16 | 8
Install Support Braces		16 | 8
Verify the Gate Panel Swing		16 | 8
Install the Gate Interlock		16 | 9
Verify the Gate Interlock Operation		16 | 9
Adjust the Interlock Keeper Assembly Magnet		16 | 9
Swing Gate		16 | 10
Assemble the Swing Gate		16 | 10
Install the Gate Post Extensions		16 | 11
Raise and Secure the Swing Gate Assembly		16 | 12
Anchor the Gate Post Base Plates		16 | 12
Plumb and Square the Gate		16 | 12
Install Support Braces		16 | 12
Verify the Gate Panel Swing		16 | 12
Install the Gate Interlock		16 | 13
Verify the Gate Interlock Operation		16 | 13
Adjust the Interlock Keeper Assembly Magnet		16 | 13

PFLOW INDUSTRIES MATERIAL HANDLING SOLUTIONS
www.pflow.com
P 414 352 9000
F 414 352 9002
6720 N. Teutonia Ave.
Milwaukee, WI 53209

Description	Section | Page
16. Gate Installation (continued)	
Single Vertical Acting (SVA) Gate	16 | 14
Establish Placement	16 | 14
Prepare the Chains in the Gate Posts	16 | 15
Begin Horizontal Assembly	16 | 16
Install the Header	16 | 16
Install the Chains	16 | 17
Assemble the Gate Panel	16 | 18
Attach the Gate Panel to the Gate Chains	16 | 18
Raise and Secure the Gate	16 | 19
Align the Gate Assembly	16 | 19
Anchor the Gate Post Base Plates	16 | 19
Plumb and Square the Gate	16 | 20
Install Support Braces	16 | 20
Adjust the Gate Panel	16 | 21
Install the Gate Panel Interlock	16 | 22
Verify the Gate Operation	16 | 22
Begin Vertical Assembly	16 | 23
Establish Placement	16 | 23
Prepare the Chains in the Gate Posts	16 | 23
Raise and Secure the Gate Posts	16 | 23
Install the Header	16 | 24
Install the Chains	16 | 24
Assemble the Gate Panel	16 | 25
Attach the Gate Panel to the Gate Chains	16 | 26
Install Support Braces	16 | 26
Adjust the Gate Panel	16 | 27
Install the Gate Interlock	16 | 28
Verify the Gate Operation	16 | 28

PFLOW INDUSTRIES MATERIAL HANDLING SOLUTIONS
www.pflow.com
P 414 352 9000
F 414 352 9002
6720 N. Teutonia Ave.
Milwaukee, WI 53209

Description	Section | Page
16. Gate Installation (continued)	
Carriage Mounted Single Vertical Acting (SVA) Gate	16 | 29
Establish Placement	16 | 29
Prepare the Chains in the Gate Posts	16 | 30
Begin Horizontal Assembly	16 | 31
Install the Header	16 | 31
Install the Chains	16 | 32
Assemble the Gate Panel	16 | 33
Attach the Gate Panel to the Gate Chains	16 | 33
Raise and Secure the Gate	16 | 34
Align the Gate Assembly	16 | 34
Plumb and Square the Gate	16 | 35
Weld the Gate Posts	16 | 35
Install Support Braces	16 | 35
Attach the Bumpers	16 | 36
Adjust the Gate Panel	16 | 36
Install the Gate Limit Switch and Stationary Junction Boxes	16 | 37
Verify the Gate Operation	16 | 37
Begin Vertical Assembly	16 | 38
Establish Placement	16 | 38
Prepare the Chains in the Gate Posts	16 | 38
Raise and Secure the Gate Posts	16 | 38
Install the Header	16 | 39
Install the Chains	16 | 39
Assemble the Gate Panel	16 | 41
Attach the Gate Panel to the Gate Chains	16 | 41
Plumb and Square the Gate	16 | 42
Weld the Gate Posts	16 | 42
Install Support Braces	16 | 42
Attach the Bumpers	16 | 43
Adjust the Gate Panel	16 | 43
Install the Gate Limit Switch and Stationary Junction Boxes	16 | 44
Verify the Gate Operation	16 | 44

Table of Contents

PFLOW INDUSTRIES MATERIAL HANDLING SOLUTIONS
www.pflow.com
P 414 352 9000
F 414 352 9002
6720 N. Teutonia Ave.
Milwaukee, WI 53209

Description		Section | Page
17. Gate Cable Interlock	15709-0029	17 | 1
Important Safety Information		17 | 1
Purpose		17 | 2
General Description		17 | 4
Carriage Cam		17 | 4
Column Mounted Roller Assembly		17 | 4
Control Cable		17 | 4
Gate Cable Interlock Assembly		17 | 4
Peelle Terms		17 | 5
Important Safety Information		17 | 6
Straddle Placement		17 | 7
Cantilever Placement		17 | 7
Adjust the Interlock Assembly		17 | 8
Adjust the Cam and Cable		17 | 8
Position the Roller Arm on the VRC Column		17 | 9
Wire the Electrical Switches		17 | 11
18. Enclosure Panels	15709-0038	18 | 1
Full Height Enclosures		18 | 1
Inventory Enclosure Panels		18 | 2
Assemble and Install Enclosure Panels		18 | 2
19. Signage Locations	15709-0035	19 | 1
20. Landing Platform or Ramp	15709-0004	20 | 1
Install the Gate Post Extensions		20 | 1
Install the Landing Platform		20 | 1
Install the Ramp		20 | 1
21. Adjust Overcurrent Sensor (OCS)	15709-0052	21 | 1
Overcurrent Sensor (OCS) Purpose		21 | 1
Test and Calibrate the OCS		21 | 1
22. Start-Up Procedures	15705-0014	22 | 1
Start-up Procedures		22 | 1
Confirm Emergency Stop Safety Operation		22 | 1
Confirm Motor Rotation		22 | 1
Inspect for Binding		22 | 2
Confirm Carriage Stops are Level with the Floor		22 | 2
Confirm Gate Safety Operation		22 | 2
Confirm Push-button Operation		22 | 2
Conduct a Load Test		22 | 3
23. Installation Completion Checklist	15710-0023	2 | 1
24. Installation Questionnaire	15708-1500	24 | 1
25. Acceptance Certification - VRC	15710-0017-VRC	25 | 1

MATERIAL HANDLING SOLUTIONS
www.pflow.com
P 414 352 9000
F 414 352 9002
6720 N. Teutonia Ave.
Milwaukee, WI 53209

Customer Information

Customer Name	Job Number

Options

Description	Document #	Revision

Bill of Material Sheets

Document #

Table of Contents

MATERIAL HANDLING SOLUTIONS

www.pflow.com
P 414 352 9000
F 414 352 9002
6720 N. Teutonia Ave.
Milwaukee, WI 53209

Customer Information

Customer Name	Job Number

Job Drawings

Description	Document #	Revision

Table of Contents

MATERIAL HANDLING SOLUTIONS

www.pflow.com
P 414 352 9000
F 414 352 9002
6720 N. Teutonia Ave.
Milwaukee, WI 53209

MATERIAL HANDLING SOLUTIONS

www.pflow.com
P 414 352 9000
F 414 352 9002
6720 N. Teutonia Ave.
Milwaukee, WI 53209

PFlow Industries, Inc.
6720 N. Teutonia Avenue
Milwaukee, Wisconsin 53209

Office
Phone: 414-352-9000
Fax: 414-352-9002

Product Support Department
e-mail: psd@pflow.com

Sales
e-mail: sales@pflow.com

For a list of contact personnel visit the PFlow Industries, Inc. website at:
http://www.pflow.com/contact-us/

Documentation

PFlow Industries, Inc. reserves the right to make changes or improvements to the standard model line at any time. PFlow Industries, Inc. reserves the right to make changes to subsequent editions of the manual without prior notice to holders of this edition.

Copyright Notice

© Copyright April 2018 by PFlow Industries, Inc.

All rights reserved.

No part of this manual may be reproduced or used in any form without expressed written permission from PFlow Industries, Inc.

This publication may be photocopied by the original purchaser of the VRC. Any other type of reproduction is prohibited without express written permission from PFlow Industries, Inc.

Trademarks

All trademarks referenced in this manual are the property of their respective owners.

System Modifications/ Disclaimer

Mechanical or electrical modifications performed on the VRC not approved by PFlow Industries, Inc. may void any warranty and/or service agreements. Please contact the PFlow Product Support Department for assistance with service modifications.

Training

Training is available upon request from the Product Support Department. Half-Day, Full-Day, and Two-Day sessions are customized to fit specific needs - either for a single VRC type or for the entire product line.

On-site Supervision

On-site supervision services are available from the Product Support Department. Contact our Field Operations Manager for more details.

Source Language

This manual is written in American English.

MATERIAL HANDLING SOLUTIONS

www.pflow.com
P 414 352 9000
F 414 352 9002
6720 N. Teutonia Ave.
Milwaukee, WI 53209

PFLOW INDUSTRIES MATERIAL HANDLING SOLUTIONS
www.pflow.com
P 414 352 9000
F 414 352 9002
6720 N. Teutonia Ave.
Milwaukee, WI 53209

Introduction

This manual provides information about the PFlow Industries, Inc. custom designed Vertical Reciprocating Conveyor (VRC). As the nations' leading manufacturer of vertical material handling equipment, PFlow Industries, Inc. is confident that this new VRC will provide many years of reliable service.

General Overview

The VRC provides a safe and simple means of moving material from one level to another. The simplicity of design and few moving components ensure a trouble-free, long life, with low maintenance and little downtime.

Code Requirements

This VRC is designed for the movement of materials only, up to the VRC's rated capacity, from one level to the next. Do not allow anyone to ride on the VRC. VRCs are **not** elevators, and are specifically excluded within the scope of the ASME A17.1 Safety Code for Elevators and Escalators. VRCs are included in ASME B20.1 Safety Standard for Conveyors and Related Equipment, which is incorporated by reference into OSHA 29 CFR 1910. A copy of the ASME B20.1 standard can be purchased at www.asme.org and other sources. PFlow Industries, Inc. recommends that this standard be referenced for appropriate installation, maintenance, inspection, and operation in relation to hazards. All electrical designs and components are in accordance with National Electric Code (NEC) requirements. Local codes may require initial inspection of the installation and periodic inspection and testing of the unit. Contact PFlow Industries, Inc. for more information in the event an inspection is required.

NOTE

The information and illustrations in this manual are intended only as an aid to understanding the VRCs general installation. The information and illustrations do not cover every possible contingency or circumstance regarding nonstandard options or site conditions.

If there is a problem, call PFlow Industries, Inc. at (414) 352-9000, during normal business hours, 8:30 a.m. to 5:00 p.m. central standard time, Monday through Friday. Outside of those hours, see the PFlow Industries, Inc. Contact Information page for additional information. Use the model number and serial number or the PFlow Industries, Inc. General Arrangement (GA) drawing number for the lift in all correspondence.

Parts

Equipment damage resulting from modification in any manner from the original model, including the substitution of parts other than factory authorized parts, will void the warranty. Furthermore, PFlow Industries, Inc. will not be liable for any loss, injury, or damage to persons or property, nor for direct, indirect, or consequential damage of any kind resulting from modified or substitution of parts other than factory authorized parts of said material or equipment.

PFlow Industries, Inc. maintains a complete stock of, or has access to, all replacement components. Detailed records of all equipment sold are kept. If a component is damaged in shipment, is defective or missing, contact PFlow Industries immediately.

Service

The PFlow Industries, Inc. Product Support Department will assist maintenance and service personnel with any questions or problems regarding the equipment or installation.

Feedback

Your feedback is important. Please help PFlow Industries, Inc. understand if the equipment has met your expectations. Please complete the questionnaire in this manual. The questionnaire will help us address any comments and/or concerns.

MATERIAL HANDLING SOLUTIONS

www.pflow.com
P 414 352 9000
F 414 352 9002
6720 N. Teutonia Ave.
Milwaukee, WI 53209

PFLOW INDUSTRIES MATERIAL HANDLING SOLUTIONS
www.pflow.com
P 414 352 9000
F 414 352 9002
6720 N. Teutonia Ave.
Milwaukee, WI 53209

Parts and Labor

Parts:		Labor:	
Structure	Lifetime	Structure	Lifetime
Manufactured Components	1 Year	Manufactured Components	1 Year
Purchased Components	1 Year	Purchased Components	90 Days
Gates and Enclosures	90 Days	Gates and Enclosures	90 Days

Definitions

- Structure is defined as columns, carriage, and pre-fabricated bracing (excluding carriage side guards).
- Manufactured components are defined as those components manufactured by PFlow Industries, Inc.
- Purchased components are those components that are used as supplied by vendors.

Warranty

PFlow Industries, Inc. expressly warrants to the original purchaser that this product will be free from defects in material and workmanship under normal, intended use. The warranty period begins 30 days after shipment.

Exclusions

This warranty does not apply to:

1. Equipment or components damaged or broken in transit or shipping.
2. Replacement of wear parts.
3. Equipment failures caused by abuse, misuse, exceeding recommended capacities, impact with other objects, negligence, improper installation, unskilled use, unskilled maintenance, inadequate maintenance, or incorrect adjustments.
4. Exposure to a corrosive or abrasive environment or exterior elements unless specifically built for that environment.
5. Equipment that has been repaired, altered or modified in any manner outside of the manufacturing facility, substitution of parts other than factory authorized parts, removal of any parts, or addition of any parts without prior written permission by PFlow Industries, Inc.
6. Any losses or damages resulting from loss of data, loss of revenue or profits, loss of products, incidental or consequential damages, delays, or expenses incurred by failure of said part or parts even if advised of the possibility thereof.
7. Lost time and/or additional trips for missing or damaged components.
8. Expedited freight charges.

Obligation

The obligation for PFlow Industries, Inc. is limited to only the replacement or repair of defective components that received prior authorization. This is the owner's sole remedy.

PFlow Industries, Inc. will bear normal labor charges performed by an authorized PFlow Industries, Inc. service agent during standard business hours, excluding overtime, holiday rates, or any additional fees.

This warranty applies to all models and no person except an officer of PFlow Industries, Inc. is authorized to modify this warranty or to incur on behalf of PFlow Industries, Inc. any other obligation or liability in connection with PFlow Industries, Inc. equipment.

PFLOW INDUSTRIES MATERIAL HANDLING SOLUTIONS
www.pflow.com
P 414 352 9000
F 414 352 9002
6720 N. Teutonia Ave.
Milwaukee, WI 53209

Liability

PFlow Industries, Inc. believes, to the best of our knowledge, that the information in the equipment manuals are accurate. In the event that technical or typographical errors exist, PFlow Industries, Inc. reserves the right to make changes to subsequent editions of the manual without prior notice to holders of this edition. The reader should consult PFlow Industries, Inc. if errors are suspected.

The customer's right to recover damages caused by fault or negligence on the part of PFlow Industries, Inc. shall be limited to the amount paid to PFlow Industries, Inc. by the customer. The limitation of liability of PFlow Industries, Inc. will apply regardless of the form of action, whether in contract or tort, including negligence. Any action against PFlow Industries, Inc. must be brought within one (1) year after that cause of action accrues.

PFlow Industries, Inc. will not be liable for any loss, injury, or damage to persons or property, nor for direct, indirect, or consequential damage of any kind resulting from failure or defective operation of said material or equipment.

Warranty Procedures

All billing must be in accordance with our Warranty Procedures. Replacement of defective parts will be handled in accordance with the Return Materials Authorization (RMA) policy for PFlow Industries, Inc.

Pre-Authorization

- All warranty work must be pre-authorized by PFlow Industries, Inc. Product Support Department prior to starting work.
- Where distance and or experience may be more cost-effective, PFlow Industries, Inc. reserves the right to use alternate organizations.
- Labor is defined as a maximum of two hours travel per call, plus reasonable on-site repair time as determined by PFlow Industries, Inc.
- Local purchase of components must be pre-authorized.

1. Notify the PFlow Industries, Inc. Product Support Department of the problem for authorization.
2. PFlow Industries, Inc. will determine:
   - The cause of the problem.
   - Who will do the repair work.
   - The repair details involved.
3. If PFlow Industries, Inc. decides that your organization or your subcontractor will do the work, an authorization number will be assigned which must be referenced on all subsequent paperwork.

NOTE *Notify PFlow Industries, Inc. by phone, FAX, or e-mail during the next business day if an event occurs during our non-working hours. Issuance of an authorization number does not guarantee approval and/or payment.*

Invoices

1. Submit an invoice for approval within 30 days after the date the work was completed. Payment is made 30 days after the date of approval.
2. A deduction from outstanding payments to PFlow Industries, Inc. for warranty is never authorized.
3. Invoices received without sufficient information will be returned. Invoices will be reconsidered for approval when complete documentation is received. All invoices must include, in detail, the following:

☐ PFlow serial number.	☐ Labor hours expended resolving the problem.
☐ Date the work was performed.	☐ Rates per hour.
☐ Description of the problem.	☐ Copies of receipts for materials purchased.
☐ Travel time incurred.	☐ Detailed description of work completed.

PFLOW INDUSTRIES MATERIAL HANDLING SOLUTIONS
www.pflow.com
P 414 352 9000
F 414 352 9002
6720 N. Teutonia Ave.
Milwaukee, WI 53209

Read the Entire Manual

Important: carefully read the entire manual upon receipt of the VRC. Improper installation, alteration, adjustment, service, cleaning, or maintenance could result in death, severe injury, or property damage. Instructions and warnings must be read and thoroughly understood by all operators and users. PFlow Industries, Inc. recommends that the owner conduct regular staff training including safety instructions on a regular basis to avoid the risk of accident or damage to the VRC.

Following procedures other than those indicated in this guide to install, use, and maintain the VRC is considered inappropriate and may cause fatal accidents, personal injury, or property damage, in addition to invalidating the warranty.

Intended Purpose

The intended purpose of the PFlow Industries, Inc. Vertical Reciprocating Conveyor (VRC) is to provide a safe and simple means of moving materials only, up to the VRCs rated capacity, from one level to another. VRCs are **not** elevators. The VRC is exclusively intended for use in establishments where all operators have been trained to understand the purpose, limitations, and associated hazards of the VRC. Any other use is strictly forbidden.

Potential Risks and Possible Misuse

PFlow Industries, Inc. has attempted to protect against as many hazards as possible. The following potential risks should be addressed before the VRC is put into operation:

- Risk of injury caused by falling products.
- Risk of injury caused by product extending beyond the confines of the carriage.
- Risk of injury caused by exceeding the weight capacity of the VRC.
- Hazards occurring at places where the VRC connects to incoming and outgoing conveyors.
- Risk of injury if any safety features are bypassed.
- Risk of injury due to the use of corrosive chemicals or water jet.

Safety Alert Symbols

To ensure your safety and the safety of those around you, it is important that you read, observe, and understand ALL safety precautions relative to a particular task. Safety precautions in the manual are labeled with an alert symbol followed by the word **DANGER**, **WARNING**, or **CAUTION**.

This is the safety alert symbol. It is used to alert you to potential physical injury hazards. Obey all safety messages that follow this symbol to avoid possible injury or death.

DANGER Indicates a hazardous situation that, if not avoided, will result in death or serious injury.

WARNING Indicates a hazardous situation that, if not avoided, could result in death or serious injury.

CAUTION Indicates a hazardous situation that, if not avoided, could result in minor or moderate injury.

NOTICE Used to address practices not related to physical injury.

PFLOW INDUSTRIES MATERIAL HANDLING SOLUTIONS
www.pflow.com
P 414 352 9000
F 414 352 9002
6720 N. Teutonia Ave.
Milwaukee, WI 53209

⚠ DANGER

- Stay within the rated lift capacity.
- Make sure all safety devices are in place and operable before using the equipment. If any safety device is missing or inoperable, immediately remove the equipment from service.

- High Voltage! A qualified electrician must install all electrical connections and permanent wiring in accordance with applicable local or national electrical codes. Make sure the equipment is properly grounded in accordance with local electrical codes or, in the absence of local codes, with the current edition of the National Electrical Code NFPA No. 70.
- Falling column hazard! Make sure all beams, columns, posts, enclosure panels, and components are properly supported during installation. Illustrations may show the beams, columns, posts, enclosure panels, and components unsupported in order to make the equipment and installation instructions clearly understood.
- Keep clear of unsupported platforms. Stay out of the area under a raised platform. If a maintenance operation requires the carriage to remain in the raised position, refer to Bulletin 15709-0083 for additional information or contact PFlow Industries, Inc. Product Support Department for assistance.

⚠ WARNING

- Passengers are not permitted. Riding may result in death or serious personal injury.
- This equipment can be dangerous if not used properly. Allow only competent adults who have been properly trained and authorized personnel to operate this equipment.
- This equipment must be maintained to ensure safety. Allow only properly trained personnel to service the equipment. Implement a routine safety inspection plan and follow the recommended preventive maintenance schedule in the owner's manual.

- Lockout/tagout equipment before performing any adjustments or maintenance. If the equipment is not locked out, it could start unexpectedly and cause injury or damage. ***Make sure all personnel are aware of the potential for stored energy to be present even after the power has been locked out.*** Refer to ANSI Z244.1 and OSHA 29 CFR 1910.147 for minimum requirements for a lockout/tagout system. There may be additional state or local requirements.

- Components and accessories may be heavy. To prevent serious injury, use the appropriate lifting apparatus when handling the components and installing the VRC.

PFLOW INDUSTRIES MATERIAL HANDLING SOLUTIONS
www.pflow.com
P 414 352 9000
F 414 352 9002
6720 N. Teutonia Ave.
Milwaukee, WI 53209

⚠WARNING

- If any defects relating to operating safety and reliability are detected or if any damage occurs, the VRC must be taken out of operation immediately.
- Before the VRC is put into operation, all VRC parts must comply with all relevant health and safety directives and regulations.
- Do not switch the main power supply on or start the VRC when persons are in contact with the VRC.
- Make sure that no persons or objects are within the range of any moving parts of the VRC.
- Climbing, sitting, walking, or riding on equipment while the equipment is in operation could result in death or serious injury.
- If this VRC needs to be modified in any way, contact PFlow Industries, Inc. for assistance. Do not make any unauthorized changes.

- Falling Hazard! Close all gates before the carriage is moved. Never leave the lift unattended with the gates in the open position. Never close gates when a person is on the carriage or within the fenced area.
- Place the load in the center of the lift platform to avoid shifting loads. Make sure that any portion of the load does not overhang the perimeter of the carriage. This could create an unstable load condition.
- If the carriage deck does not stop after contact has been made with the limit switch arm, or continues to drift past the floor level, the lift motor brake is not working properly. Discontinue use of the VRC and contact PFlow Industries, Inc. for assistance.

- Lockout/tagout the VRC before removing jammed product. Be aware that stored energy in the lift components may move or shift when the jam is removed. De-energize any circuit before work is begun.
- Do not overtravel! Stops, mechanical or electrical, must be in place to prevent the carriage from traveling beyond the intended floor level. Overtravel could cause permanent damage to the carriage or failure of the lifting mechanism.
- Entanglement hazard! Secure long hair, wear snug-fitting clothing, and avoid wearing jewelry while using the VRC.

PFLOW INDUSTRIES MATERIAL HANDLING SOLUTIONS
www.pflow.com
P 414 352 9000
F 414 352 9002
6720 N. Teutonia Ave.
Milwaukee, WI 53209

⚠CAUTION

- During operation, the surfaces of some components may become hot. Avoid touching hot surfaces or wear protective gloves.
- Inform personnel about the location and operation of emergency stops and power disconnection points.
- If any unsafe or unusual conditions are observed, stop the equipment and remove it from service. Report the condition to your supervisor.

PFLOW INDUSTRIES MATERIAL HANDLING SOLUTIONS
www.pflow.com
P 414 352 9000
F 414 352 9002
6720 N. Teutonia Ave.
Milwaukee, WI 53209

Electrical Safety Precautions

⚠ DANGER

High Voltage! Employees servicing or maintaining VRCs may be exposed to death or serious personal injury if hazardous energy is not properly controlled. De-energize any circuit before work is begun. Follow your facilities procedures or OSHA lockout/tagout (LOTO) procedures anytime maintenance or service is being performed on any electrical box or component.

⚠ CAUTION

The incoming voltage source must match the voltage identified on the rating tag. The rating tag provides essential technical information required for any installation, maintenance, or repairs. Do not remove, damage, or modify the rating tag.

De-energize the Circuit

1. Lockout/tagout whenever any work, maintenance, or service is performed on any electrical box or component. Make sure circuits are de-energized before starting work, using a functional, properly rated, and well maintained multimeter or voltage sensing device. Make sure the device is rated for the level of voltage being measured and is sensitive enough for the application.
2. Use fuse pullers to change a fuse; ***never*** use bare hands, pliers, or screwdrivers.
3. Install covers on exposed electrical devices or wires to protect personnel from serious injury.
4. Ground all metal connection boxes, switch boxes, starting boxes, transformers, motors, limit switches, interlocks, and push-button stations to prevent shock to personnel.
5. When using a portable meter, never leave one lead dangling with the other lead connected. Anyone touching the lead may receive a shock through the meter.
6. Make sure that all is clear following lockout/tagout procedures before applying power to a circuit. This is necessary in order to protect personnel from injury and to prevent damage to the equipment.
7. Avoid accidental contact with equipment or conductors which are known to be energized or are ***not*** known to be de-energized. If it is necessary to work on equipment while it is energized, use extra care. Always test and repair equipment that appears damaged or delivers an electric shock.

Take time to be careful! Follow all safety precautions to prevent death or personal injury.

PFLOW INDUSTRIES MATERIAL HANDLING SOLUTIONS
www.pflow.com
P 414 352 9000
F 414 352 9002
6720 N. Teutonia Ave.
Milwaukee, WI 53209

Electrical Safety Precautions

⚠ DANGER

High Voltage! To prevent serious injury, death, or property damage, all electrical connections and permanent wiring must be installed by a licensed electrician in accordance with applicable local or national electrical codes. Arc flash and shock hazard appropriate PPE is required. This equipment must be adequately grounded in accordance with local electrical codes or, in the absence of local codes, with the current edition of the National Electrical Code NFPA No. 70.

Working on Energized Circuits

When electrical repair or maintenance work is required that prohibits de-energizing the circuits involved, extreme caution must be used. The work should be completed only by authorized, well trained and supervised personnel who are fully aware of the dangers involved. All practical safety measure must be used to protect the personnel performing the required work. In addition to the NFPA No. 70 codes, the following precautions **must** be taken:

1. Remove all wristwatches, watch chains, rings, necklaces, metal appendages to clothing, oversized metallic belt-buckles, metal piercings, or loose clothing. These items have the potential to make accidental contact with energized surfaces. In addition, secure long hair with a hair net or cover with a plastic helmet.
2. Remove all hair barrettes or bobby pins. These items are electrically conductive and accidental contact may cause serious personal injury.
3. Wear dry clothing and shoes. Moisture should not be present on the soles of shoes. Water is electrically conductive and accidental contact may cause death or serious personal injury.
4. Insulate the worker from the ground. Cover any adjacent grounded metal surfaces with an insulating material. Suitable insulating materials are dry wood, rubber mats, dry canvas, dry phenolic material, or heavy, multi-ply paper (cardboard). Make sure that the insulating material has no holes present and there are no conductive materials (e.g., staples) embedded. Cover a sufficient area with the insulating material to make sure that adequate space is permitted for worker movement.
5. Use insulated tools when working on energized circuits or fuse box. These insulated tools must be rated to withstand the voltage of the energized circuits.

Notes for the Installation Electrician

The installation electrician must take the following precautions:

1. Locate and review the electrical schematics furnished with the equipment.
2. Verify the proper fit-up, wiring and operation of all required electrical components.
3. Mount the push button station out of reach of someone located on the carriage (approximately six feet [1829mm]).
4. Wire standard lift limit switches on the chain tensioning assembly (see the job specific electrical schematic as required) for mechanical VRCs as follows:
   If the tensioner chain becomes slack causing the arm on the limit switch to move down or if a strong tension is exerted on the tensioner chain causing the arm to move up, there is a break in the control power. The limit switches are designated with an LS# on the electrical schematic.

Entrance Below a Raised Carriage Deck

PFLOW INDUSTRIES MATERIAL HANDLING SOLUTIONS

www.pflow.com
P 414 352 9000
F 414 352 9002
6720 N. Teutonia Ave.
Milwaukee, WI 53209

Safety First

The most common reason to access the area below a raised carriage deck is to clean debris from the pit or hoistway. This is best accomplished using a long handled broom or rake to avoid entry under the raised carriage deck. Entry under the raised carriage deck is acceptable only when unavoidable and then only if the proper precautions are taken. It is the user's responsibility to ensure that the following conditions be met before allowing qualified personnel to enter the area under the raised carriage deck.

- Work must be performed by qualified maintenance technicians.
  - ASME B20.1-2015 defines a qualified person as "A person who, by possession of recognized degree or certificate of professional standing or by extensive knowledge, training, and experience, has successfully demonstrated his/her ability to solve problems relating to the subject matter and work."
- The facility has performed a Risk Assessment per ASME B20.1-2015 5.16
  - Reference OSHA 3071 for Job Hazard Analysis
  - Reference CEMA Technical Report 2015-01, ASSE Z590.3, and MIL-STD-882 for Risk Assessment examples.
- A proper Lockout/Tagout (LOTO) procedure has been performed on the VRC.
  - Refer to ANSI/ASSE Z244.1-2003 (R2014), Control of Hazardous Energy — Lockout/Tagout and Alternative Methods, and OSHA Standard 29 CFR 1910.147, The Control of Hazardous Energy (Lockout/Tagout).
- At least two (2) means of support are used to secure the raised platform.
  - The lifting systems can be used as one means of support provided that no work is to be done on the hydraulic system or mechanical drive system and an appropriate LOTO has been performed on the VRC.
  - Additional means of support include adequately sized maintenance chains, maintenance pins, DeckLocks, or straps with shackles around the drivebase that are capable of supporting the weight of the carriage.

Minimize the Hazards

Every employee must be aware of the hazards before entering the area under a raised carriage. Take appropriate steps to minimize these hazards and any others that are identified. Some of the more common hazards are:

- Inadequate refuge space
- Confined space
- Improper air quality
- Inadequate lighting
- Improper access
- Tripping hazards
- Unsafe or lack of pit ladders
- The presence of moisture/water/oil
- Moving equipment

General Guidelines

- Where a VRC is operating in a multiple unit hoistway, that portion of the hoistway where the work is to be performed shall be fully separated or accessible equipment locked out.
- Do not work in a pit with standing water.
- Ensure that all portable lights and tools are connected through a Ground Fault Circuit Interrupter (GFCI).
- Provide adequate lighting especially if in a shaftway.
- For a deep pit, never "jump" into the pit – always use a ladder.
- Use proper hand protection while cleaning the area beneath a raised carriage.
- Do not leave parts, lubricants, cleaning equipment, etc in the pit.
- Do not stand on the hydraulic piping or electrical conduit.
- Never straddle over the traveling cable(s) if so equipped and protect it against damage.

Entrance Below a Raised Carriage Deck

MATERIAL HANDLING SOLUTIONS

www.pflow.com
P 414 352 9000
F 414 352 9002
6720 N. Teutonia Ave.
Milwaukee, WI 53209

Pit Access

Access to the area beneath the raised carriage deck can be gained through manual measures implemented by qualified maintenance technicians or automatically through the use of a factory supplied option known as maintenance mode.

Manual Access

1. Call the carriage to the lower level.
2. Open the lower gate and bypass the gate open switch at the interlock or in the main control panel. If there is any confusion about how to do this, call the PFlow Industries, Inc. Product Support Department.
3. Barricade the lower level gate opening to prevent unintended access and provide hazard warning signs.
4. Verify that the carriage is empty. Raise the carriage to the upper level making sure all personnel are clear of the moving carriage.
5. Lockout the lift in accordance with the facility Lockout/Tagout program.
6. Secure the carriage at the upper level using adequately sized maintenance chains, maintenance pins, DeckLocks, or straps with shackles around the drivebase that are capable of supporting the weight of the carriage to provide additional safety.
7. After the carriage is secured, barricade the upper level gate to prevent anyone from entering the carriage while someone is working underneath.

NOTICE

Do not attempt to do any work on the lifting system (e.g., hydraulic system, motor drive). When work is to be done on the hydraulic system or mechanical drive system, a different procedure must be followed. The carriage must be landed on stands or secured by another means in order to prevent any weight from relying on the lifting means or when the hydraulic pressure is fully relieved. Consult Factory.

8. Return to the lower level and verify that the gate and the carriage does not move if the push-buttons are pressed. Wedge or block the lower level gate in the open position to prevent the gate from closing while someone is in the pit area.
9. Perform the necessary maintenance, adjustments, or cleaning under the carriage.
10. Exit the pit and remove the wedge or block holding the lower level gate open.
11. Reverse the process to return the VRC into service.

Automatic Access - Maintenance Mode with DeckLocks (if provided with the VRC)

1. Operator turns the key to Maintenance Mode (if any gate is open the Maintenance Mode light flashes to alert the operator to close the gate).
2. Call/Send stations are deactivated at this time.
3. Once gates are closed, the carriage travels to the upper level and stops.
4. The DeckLocks extend under the carriage structure, and the carriage comes down to rest on the DeckLocks.
5. The DeckLocks are proofed in position and the “Maintenance Locks Secure” green light is illuminated.
6. Proper facility Lockout/Tagout procedures must be followed prior to lift maintenance.
7. Access is allowed to authorized maintenance personnel through the level 1 gate.

PFLOW INDUSTRIES MATERIAL HANDLING SOLUTIONS
www.pflow.com
P 414 352 9000
F 414 352 9002
6720 N. Teutonia Ave.
Milwaukee, WI 53209

Unique Descriptions and Names

PFlow Industries, Inc. has incorporated, as well as created, a number of unique descriptions, names, and terminology for parts, components, and devices included in the Vertical Reciprocating Conveyor (VRC). This glossary includes these unique terms and other common terms to help understand this manual and the information it contains. In addition, the glossary will aid the user in communicating the correct information during troubleshooting and service situations. Although the wording and descriptions may sound familiar to the person who has read the manual, other terms and descriptions might not. It is recommended by PFlow Industries, Inc. that this glossary be reviewed before reading the remainder of this manual.

Alkyd paint	A fast-drying enamel paint, color-mixed per the customer's request, and applied using standard methods as specified by the paint manufacturer.
ANSI	American National Standards Institute: www.ansi.org
ASME	American Society of Mechanical Engineers: www.asme.org
Authorized person	Trained or qualified personnel approved to perform a specific duty or duties.
Back-frame	The vertical portions of the carriage on a cantilever VRC, typically a series D vertical support mast.
Backstop panel	Also known as a Mezzanine roll-off panel, this is a panel that is installed opposite the loading edge at upper loading levels of a VRC platform that does not penetrate a floor. The backstop panel helps protect personnel and/or products from falling off the platform when loading or unloading. This term should not be confused with the term "backstop" as defined in ASME B20.1.
Backstop	As defined by ASME B20.1; A mechanical device to prevent reversal of a loaded conveyor under action of gravity when forward travel is interrupted.
BVAC	A bi-panel vertical acting gate.
Cantilever	A style of VRC where the carriage rides along the guide columns that are located on the same side of the carriage. This style lift can accommodate loading on three sides; right, front, and left.
Capacity	The maximum load for which the VRC is designed.
Carriage	The entire structural assembly that travels on the guide columns and carries the load.
Carriage gate	A gate that is mounted directly on the carriage deck.
CEMA	Conveyor Equipment Manufacturers Association: www.cemanet.org
Chain	See Drive chain, Lift chain and Roller chain.

PFLOW INDUSTRIES MATERIAL HANDLING SOLUTIONS
www.pflow.com
P 414 352 9000
F 414 352 9002
6720 N. Teutonia Ave.
Milwaukee, WI 53209

Chain Driven Live Roller (CDLR)	A horizontal conveyor that is driven by separate loops of chain or a continuous chain. The chain contacts all roller sprockets, depending on the type and function of the horizontal conveyor. Either double or single sprockets are fitted to the horizontal conveyor rollers.
Chain Guide Tube	A tube welded to the back side of the VRC column that encloses the lift chain and tensioner chain.
Chain tensioner	A device that monitors the lift chain tension. If the lift chain is too tight, becomes slack, or breaks, the limit switch mounted on the chain tensioner will trip and remove control power.
Columns	The vertical structural members in which the wheelblocks attached to the carriage travel up and/or down.
Column splice	Columns shipped in more than one piece must be joined in the field during installation. Field assembly and welding is required.
Constant Pressure Push Button	A push button which must remain pressed and maintained by the operator in order to perform a desired operation. If the push button is released, the desired operation will stop.
Controls	Any combination of electrical devices used to control the operation of a VRC. This normally includes push buttons, relays, limit switches, interlocks, etc.
Control Panel	An enclosure housing various electrical components that control the VRC.
Control voltage	The control voltage is typically provided by the control transformer and is used to energize the various low voltage electrical devices.
Conveyor, Vertical Reciprocating	See Vertical Reciprocating Conveyor (VRC).
Dead load	A static load that is a permanent force, acting on a structure (see Platform).
Deck	The floor of the carriage (can be smooth plate, tread plate, or open).
DeckLock System	An added measure of safety to prevent uncontrolled descent of the carriage.
Diagonal drop bar	Load-defining bar and snap chain across operating end(s) of the carriage to define the load area on the platform which may minimize load movement. The diagonal drop bar is hinged at the base and swings down. This is not a load stop.
Direct acting cylinder	The cylinder which transmits lifting force directly to the carriage rather than through the use of cables, pulley, or chains.
Drivebase assembly	Gear reducer, brake motor and mechanical components that power the chain that lifts and lowers the carriage for mechanical VRCs. This assembly is typically mounted at the top of the lift guide columns.

PFLOW INDUSTRIES MATERIAL HANDLING SOLUTIONS
www.pflow.com
P 414 352 9000
F 414 352 9002
6720 N. Teutonia Ave.
Milwaukee, WI 53209

Drive chain	Drive chains on the F series mechanical VRC, through a series of a shaft and sprockets allow the carriage to be raised and lowered.
Drift	The action of a lift carriage slowly dropping, usually due to slight internal leaks in a hydraulic system or mechanical slippage of a motor brake.
EBVAC	An electrically powered bi-panel vertical acting gate.
Effective width/length	Refers to usable space for the materials load on the carriage, not the overall dimensions which includes space allowed for carriage side guards and snap chains.
Electrical cable	Electrical cables consist of at least two conductors contained within a protective outer cover.
Enclosure (lift guarding)	Structure surrounding a VRC to prevent outside interference with its normal operation and to safeguard personnel. Typically 8' (2438mm) high panels composed of expanded metal or other materials that will prevent a 2" (51mm) diameter ball from passing through (ASME B20.1 requirement).
Epoxy coating	Abrasion-resistant, two-part industrial-strength protective coating system applied over sandblasted and primed steel or direct to metal. The epoxy coating is ideal for outdoor, chemical, or caustic wash-down environments or applications where standard alkyd enamel is viewed as insufficient.
EVAC	An electrically powered single panel vertical acting gate.
Expanded metal (EM)	A sheet of metal uniformly slit and stretched, forming diamond-shaped openings in the metal sheet. Expanded metal is a one piece construction that will not unravel under normal circumstances and will hold its shape. Expanded metal comes in a standard (raised) or flattened diamond pattern in a variety of gauges, opening sizes, materials and sheet sizes.
Explosion proof (EXP)	Electrical devices (e.g., control panels, motors, limit switches) that are designed to operate safely in a specific location or area where potentially explosive environments can or do exist.
Floor-to-Floor distance	The distance from one operating floor level to the adjacent operating floor level (see Vertical travel).
Full Height Enclosures (FHE)	Structure surrounding the full height of a VRC to prevent outside interference with its normal operation and to safeguard personnel. Typically panels composed of expanded metal or other materials that will prevent a 2" (51mm) diameter ball from passing through (ASME B20.1 requirement).
Gate	A device that opens and closes manually or automatically to allow access to the carriage for loading and unloading. The gate is normally a swing, sliding, or vertical acting device constructed of similar expanded metal as the enclosure (see specific gate type).

PFLOW INDUSTRIES MATERIAL HANDLING SOLUTIONS
www.pflow.com
P 414 352 9000
F 414 352 9002
6720 N. Teutonia Ave.
Milwaukee, WI 53209

General Arrangement (GA) drawing	The drawing produced by PFlow Industries, Inc. which shows the VRC lift, gates, and enclosures. The drawing may show but does not specify building details.
Guarded by location	Describes moving parts so protected by the parts remoteness from the floor, platform, walkway, or other working level, or by the parts location with reference to the frame, foundation, or structure to reduce the foreseeable risk of accidental contact by persons or objects. The parts remoteness from foreseeable, regular, or frequent presence of public or employed personnel may constitute guarding by location in reasonable circumstances. (See ASME B20.1 standard)
Guide angles	Guide angles are attached to the guide column to help capture and contain the guide wheels in the columns and guide the carriage.
Guide column	The structural members connected to the carriage that guide the carriage travel up and down.
Header	Header refers to the horizontal structure spanning the width of the carriage or gate. The carriage header defines the load height on straddle units.
HMI (Human Machine Interface)	The user interface in the control system that provides graphic control of the VRC. The HMI communicates with the programmable logic controller (PLC).
Hollow shaft	VRC mechanical shaft of the mechanical drivebase which penetrates the gear motor rather than coupling to the gear motor. This minimizes wear points.
Hydraulic cylinder	A device which converts fluid power into linear force and motion. The hydraulic cylinder usually consists of a movable element such as a piston and piston rod, plunger or ram, operating within a cylindrical bore.
Hydraulic power unit	Refers to motor, pump, and reservoir assembly. The reservoir is shipped with oil. Most hydraulic power units come with the control panel attached and pre-wired to the hydraulic pump.
Incoming voltage	The main voltage being supplied for operation of the equipment.
Interlock (Gate/Door)	An electro-mechanical locking system used on the gates or access doors of a VRC. The system prevents the VRC operation unless all such gates or access doors are closed. The system also prevents the opening of any such gate or access door unless the VRC carriage is present at that particular landing or opening.
Intermediate level	A floor level or levels between the uppermost and bottommost operating floor.
Junction box	An electrical control box used to join, centralize, and distribute wiring from different locations.
Keylock control	A keyed push button station that prevents unauthorized use of the VRC.
Kick plate	A curb on the outermost edge of the inoperable sides of the carriage deck which is designed to contain product and is a minimum of 4" (102mm) high.
Knock-down (KD)	Lift components shipped in two or more pieces. Typically field welding is required (e.g., KD carriage, KD headers, KD uprights, KD gates, etc.).

PFLOW INDUSTRIES MATERIAL HANDLING SOLUTIONS
www.pflow.com
P 414 352 9000
F 414 352 9002
6720 N. Teutonia Ave.
Milwaukee, WI 53209

Landing	A permanent-working surface at a fixed elevation used for loading or unloading the carriage.
Lift chain	A chain that lifts the carriage and load.
Lift location light	Illuminated push button that indicates at which level the carriage is located.
Lifted load	The total weight that the VRC is designed to lift at a specific speed. Typically, this is the dead load plus live load (see Rated load).
Limit switch	An electrical device which is used to control the carriage position and monitor various mechanical devices.
Load pattern	A method to describe the direction a load can be moved on and off a carriage at different operating floors or levels. These can be used in combinations. ● **"C" load pattern:** Carriage configuration allowing a load/unload opening on one side of the carriage deck. ● **"Z" load pattern:** Carriage configuration allowing a load/unload opening on opposite sides of carriage deck. ● **"90 degree" load pattern:** Carriage configuration allowing a load/unload openings at right angles on the carriage deck.
Load test	The carriage is loaded to rated capacity, and the lift is operated.
Macropoxy	Macropoxy is a fast drying, polyamide epoxy designed to protect steel in industrial exposures. Ideal for protection of sharp edges, corners, and welds.
Mechanical stop	A mechanical means of stopping travel at a fixed position.
Momentary contact push button	A push button which only has to be pressed for an instant to activate the desired operation.
Non-operating end	The side(s) of a carriage not used for loading/unloading. Handrails or expanded metal sides and kick plate are normally supplied as minimum guarding.
Operating end	The side(s) of the carriage used for loading/unloading. At a minimum the side(s) are normally equipped with a safety chain as guarding.
Overall dimension	The outside dimension of the carriage structure or the entire lift.
Overtravel limit switch	A safety device provided on mechanical VRCs to stop carriage travel beyond the uppermost or lowermost floor level if the floor level positioning limit switch fails.
Photo eye	Photoelectric sensor that uses a focused beam of light to span the distance to a reflector. The VRC controls receive a signal when the reflected beam of light is detected by a sensor.
Pit	A depression in the floor a minimum of 1" (25mm) deeper than the carriage profile, which allows the carriage deck to be flush at operating floor or level.
Platform	The structure that forms the floor of the carriage and that directly supports the load (see Deck).
Pneumatic gate operator	A device that requires in-plant, clean and dry air to automatically open and close a gate. The device can be operated by either manually through the use of pull cords or push buttons, or automatically through the use of a PLC.

PFLOW INDUSTRIES MATERIAL HANDLING SOLUTIONS
www.pflow.com
P 414 352 9000
F 414 352 9002
6720 N. Teutonia Ave.
Milwaukee, WI 53209

Pressure switch (hydraulic)	A sensor which detects hydraulic pressure. The sensor can be set to trip at a predetermined pressure. When this pressure setting is reached, the pressure switch will activate, opening the control circuit and stopping the pump motor.
Programmable Logic Controller (PLC)	A micro-processor based device that controls the VRC or Cartveyor™ through a resident software program.
Push-button (PB) station	The wall mounted, pedestal mounted, or hand held device used to control the operation of the VRC.
Qualified person	A person, who by possession of a recognized degree, certificate, professional standing, or skill, and who by knowledge, training and experience, has demonstrated the ability to deal with problems relating to the subject matter, the work, or the project.
Ramp	An access ramp used to load on and off of a carriage deck.
Rated load	The load the VRC is designed for and installed to lift at a rated speed (see Lifted load).
Reflector	A plastic, prismatic object used to reflect a beam of light emitted from a photoelectric sensor.
Roll-off panel	See Back-stop panel.
Roller chain	The type of chain drive most commonly used for transmission of mechanical power. The roller chain consists of a series of short cylindrical rollers held together by side links and connecting pins. The roller chain is driven by a toothed wheel called a sprocket.
Safety cam	Spring-loaded, hardened steel cam directly attached to the lift chain or gate chain that engages if the lift chain or gate chain breaks or slackens, preventing the carriage or gate panel from dropping more than a few inches.
Side guards	A protective enclosure on the outermost edge of the inoperable sides of the deck welded to the carriage to contain load. Can be rails, sheet steel, or expanded metal.
Slack chain device	A device that monitors a chain and trips if the chain goes slack. If the chain becomes slack or breaks, the limit switch mounted on the slack chain device will trip and remove power to the circuit.

PFLOW INDUSTRIES MATERIAL HANDLING SOLUTIONS
www.pflow.com
P 414 352 9000
F 414 352 9002
6720 N. Teutonia Ave.
Milwaukee, WI 53209

Spliced guide column	Guide column that is fabricated and delivered in two or more sections necessitated by manufacturing, handling, or installation constraints.
Sprocket	A wheel typically mounted on a shaft. The wheel has a row of teeth around its edge that fit into the links of a chain.
Straddle	A style of VRC where the carriage rides between two guide columns that are located on opposite sides of the carriage. This style of lift will accommodate “C” and “Z” type loading patterns.
Top of roller (TOR)	Top elevation of a horizontal conveyor system roller which is also the lower elevation of the load.
Touchscreen	See HMI.
Transom	A panel or panels used to close an enclosure opening above the VRC entrance.
Travel	The difference in elevation between the bottommost level of the carriage platform and the uppermost level of the carriage platform, regardless of whether the carriage is pit or floor mounted.
UHMW (Ultra-High Molecular Weight)	An abrasion-resistant, high-impact, polyethylene material used throughout the VRC to protect and/or guide moving parts.
Uprights	The portion of the carriage that houses the wheels that guide the carriage between the columns.
VAC	A single panel vertical acting gate.
VFD (Variable-Frequency Drive)	A VFD is a type of drive used in electro-mechanical drive systems to control AC motor speed and torque by varying the motor frequency and voltage.
Velocity fuse	A device that senses hydraulic flow across a control orifice when the pressure differential exceeds a predetermined amount. A spring-biased poppet closes, shutting flow to the damaged hydraulic circuit and prevents the lift carriage from descending.
Vertical travel	Distance the carriage deck travels; floor-to-floor or total distance (see Travel).
Vertical Reciprocating Conveyor (VRC)	A reciprocating power actuated lifting device (not designed to carry passengers or an operator) that receives loads on a carriage and transports these objects from one operating elevation to another.
VRC specification sheet	PFlow Industries, Inc. informational data sheet providing general information on a specific VRC.
Wheelblock assembly	Sub-assembly fastened to the carriage upright that contains the guide roller elements and safety cam for the chain driven VRC lift. The lift chain is typically attached to the wheelblock assembly safety cam.

MATERIAL HANDLING SOLUTIONS
www.pflow.com
P 414 352 9000
F 414 352 9002
6720 N. Teutonia Ave.
Milwaukee, WI 53209

Gate Types:

Single swing gate	This type of gate hinges on one side and latches on the other, may be either right or left-hand swing. Clear space is required in front of the VRC for the gate to swing open.
Bi-parting swing gate	The bi-parting, swing gate has hinges on each side and latches in the center. Clear space is required in front of the VRC for the gates to swing open.
Single panel vertical acting gate (VAC)	The VAC gate panel closes to the floor and opens in the upward direction.
Double panel vertical acting gate (BVAC)	The BVAC gate is the same as the single panel VAC above in operation and use except the two (2) panels telescope from a nested position.
Horizontal sliding gate	The horizontal sliding gate operates in the same manner as a vertical acting gate except the gate functions in the horizontal direction.
Roll-up door	The roll-up door can be anything from an industrial type roll-up steel door to self-storage facility type door.

MATERIAL HANDLING SOLUTIONS
www.pflow.com
P 414 352 9000
F 414 352 9002
6720 N. Teutonia Ave.
Milwaukee, WI 53209

MQ Series Cantilever

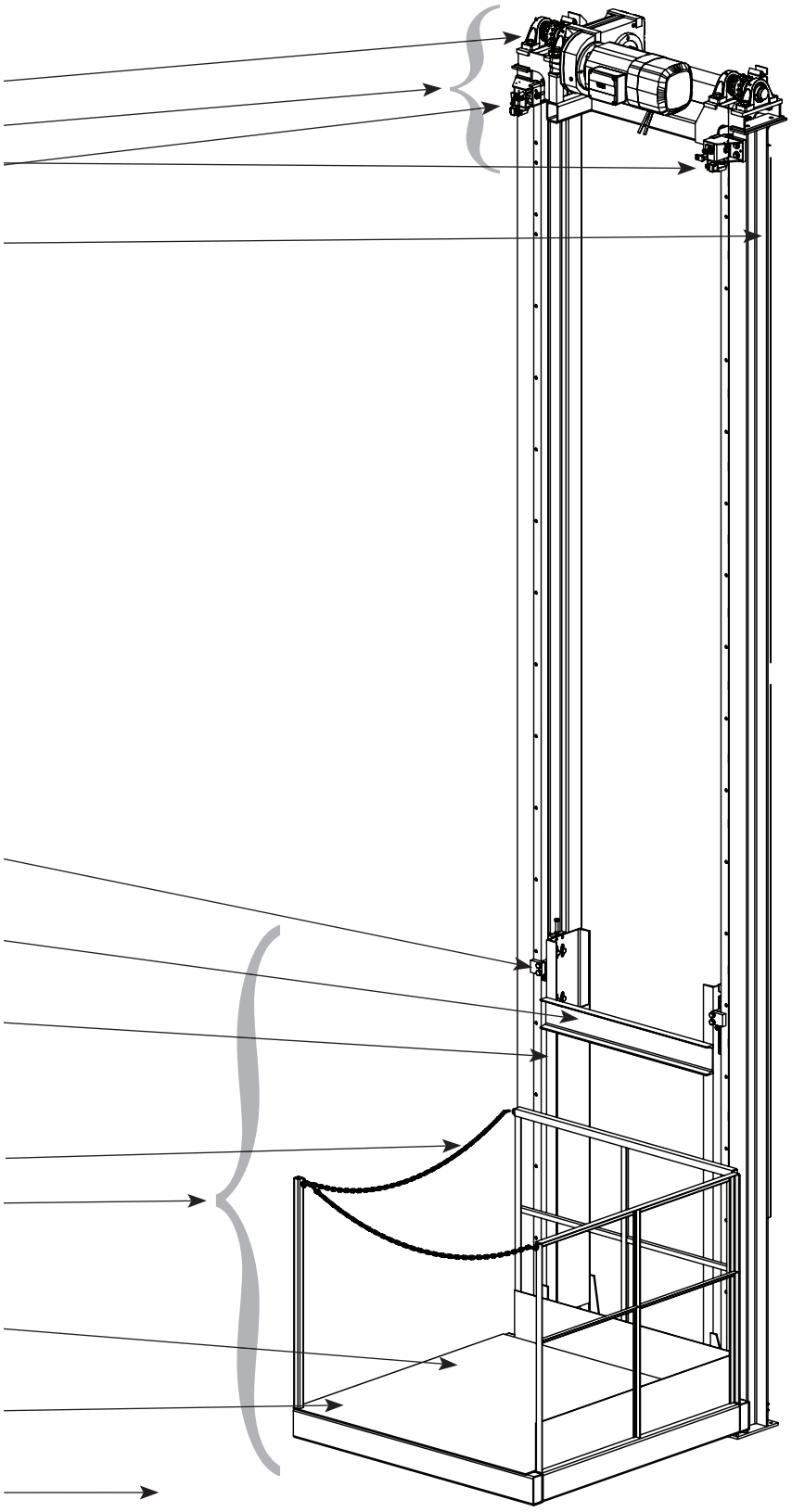

MATERIAL HANDLING SOLUTIONS
www.pflow.com
P 414 352 9000
F 414 352 9002
6720 N. Teutonia Ave.
Milwaukee, WI 53209

Push-button (PB) station

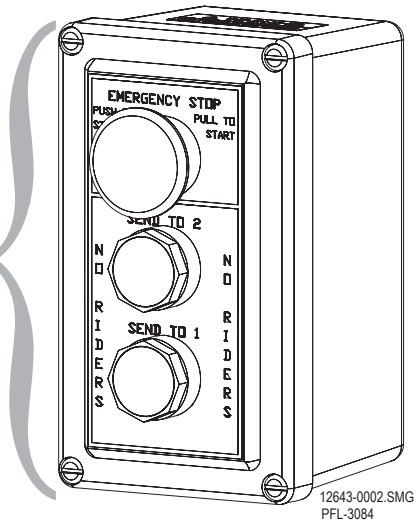

Interlock

Gate header

Gate panel

Bi-parting swing gate

Gate post

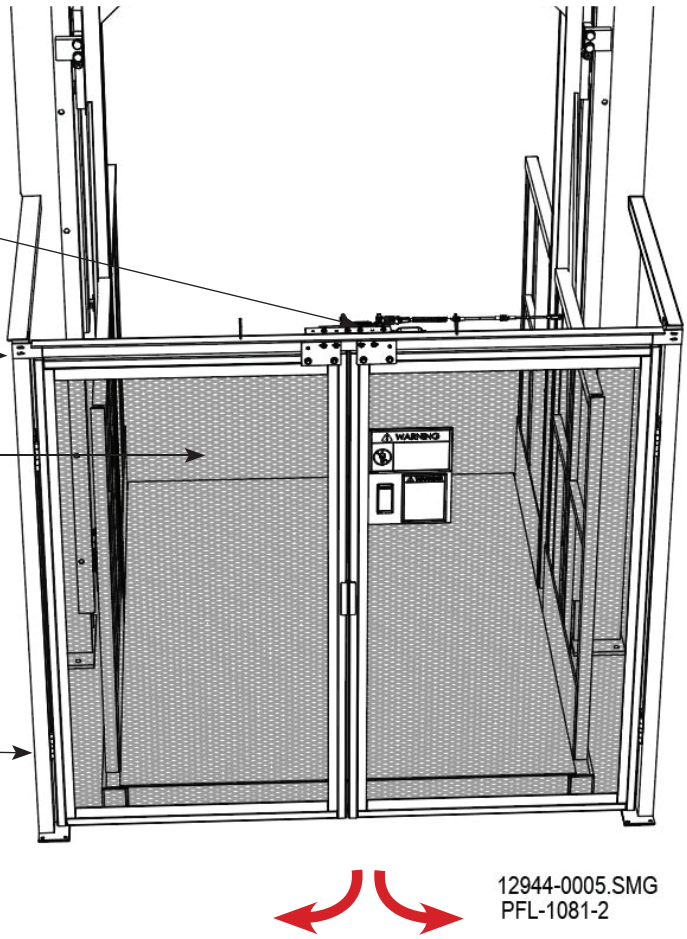

PFLOW INDUSTRIES MATERIAL HANDLING SOLUTIONS
www.pflow.com
P 414 352 9000
F 414 352 9002
6720 N. Teutonia Ave.
Milwaukee, WI 53209

Arrival

A fork truck capable of lifting approximately 2,000 lbs. (907 kg) is required. Larger Vertical Reciprocating Conveyors (VRCs) may require a heavier lifting capacity fork truck or crane. Refer to the shipping weights for the equipment required for your job. Prior to shipping, PFlow Industries, Inc. takes pictures of all the items shipped, contents of the parts crate, and individual boxes to make sure the shipment is complete.

NOTICE

The material in the boxes, cartons, etc. are delivered to the carrier agent complete and in good condition. Report shipping damage or discrepancies immediately to the PFlow Industries, Inc. Product Support Department. ***PFlow Industries, Inc. is not responsible for damage due to shipping or receiving once the equipment has left the factory nor will PFlow Industries, Inc. file any claims for damage that may occur.***

Inspection

Upon receipt, conduct an immediate inspection while the equipment is still on the truck or immediately after it is moved to the receiving area. Do not wait until after the equipment is moved to a storage area.

Verify that the number of items on the Bill of Lading agrees with the number of items delivered. Examine all pieces to determine if damage has occurred during transit. Do not sign a delivery receipt or a freight bill until a proper count has been made and inspection of all packages are complete. Should damage occur in shipment, it is a matter between the carrier and the consignee. In such cases, the carrier is assumed to be responsible for the safe delivery of the equipment, unless negligence can be established on the part of the shipper.

Verify the dimensions of the delivered materials against the PFlow Industries, Inc. General Arrangement (GA) drawing. If anything is missing or incorrect, contact the PFlow Industries, Inc. Product Support Department immediately. Failure to notify the PFlow Industries, Inc. Product Support Department may affect the completion time of the installation. The warranty does not cover lost time and/or additional trips for missing or damaged components.

Transportation Damage and Claims

1. Note all visible loss or damage that has occurred directly on the carrier's delivery receipt.
2. Have the driver sign the delivery receipt. If the driver refuses to sign, make a notation of this refusal on the receipt.
3. If the driver refuses to allow inspection, write the following on the delivery receipt: Driver refuses to allow inspection of containers for visible damage. Have the driver sign the delivery receipt.
4. Contact the carrier's office immediately upon finding damage and request an inspection. Mail a written confirmation to the carrier's office with the time, date, and the person called.
5. Save any packages and packing material for further inspection by the carrier.
6. Promptly file a written claim with the carrier and attach copies of all supporting paperwork. Report all hidden damage directly to the freight carrier within seven days of delivery.

MATERIAL HANDLING SOLUTIONS
www.pflow.com
P 414 352 9000
F 414 352 9002
6720 N. Teutonia Ave.
Milwaukee, WI 53209

Shipping Photograph Examples

Parts Crate

Parts Crate Contents

PFLOW INDUSTRIES MATERIAL HANDLING SOLUTIONS
www.pflow.com
P 414 352 9000
F 414 352 9002
6720 N. Teutonia Ave.
Milwaukee, WI 53209

Shipping Photograph Examples

Schematic

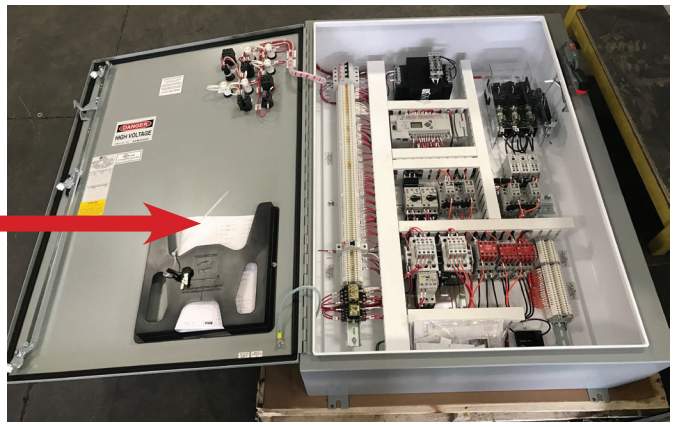

Shipping Packet

The shipping packet contains the Owner's Manual, installation instructions, General Arrangement drawing, electrical schematic, and additional information applicable to the installation.

An additional copy of the schematic is inside the control panel.

Unpack the VRC

- Save all packing materials for inspection by the carrier.
- Cut and remove the restraining straps.
- Remove the protective shrink wrap and cardboard material.
- Remove all wooden retaining blocks and crating.
- Remove the materials from the pallet.
- Dispose of the packing material in an environmentally responsible manner.

Return Materials Authorization (RMA)

All replacement components needed as a result of any damage will require a purchase order, authorization number, and compliance with PFlow Industries, Inc. Return Materials Authorization (RMA) procedures. The RMA number shall be obtained from PFlow Industries, Inc. Product Support Department. The RMA number helps to identify and track the component when returned to PFlow Industries, Inc.

Warranty Work

Warranty procedures are included in this manual. All warranty work must be pre-authorized by the PFlow Industries, Inc. Product Support Department prior to starting work.

1. Notify the PFlow Industries, Inc. Product Support Department of the problem for authorization.
2. PFlow Industries, Inc. will determine:
   - The cause of the problem.
   - Who will do the repair work.
   - The repair details involved.
3. If PFlow Industries, Inc. decides that your organization or your subcontractor will do the work, an authorization number will be assigned which must be referenced on all subsequent paperwork.

NOTE *Notify PFlow Industries, Inc. by phone, FAX, or e-mail during the next business day if an event occurs during our non-working hours. Issuance of an authorization number does not guarantee approval and or payment.*

PFLOW INDUSTRIES MATERIAL HANDLING SOLUTIONS
www.pflow.com
P 414 352 9000
F 414 352 9002
6720 N. Teutonia Ave.
Milwaukee, WI 53209

Recommended Tools

The following is a list of recommended tools necessary to expertly install the equipment to industry standards. This is only a guideline. Individual sites and applications may require additional items.

	Welding Machine and Equipment (Helmet, Gloves, Rods)		Socket Set: 1/2" Drive Sockets Sizes to 1-1/4"
	Lifting Cables, Straps, Slings or Chains: 2,000 lb. (907 kg) Capacity* (Minimum)		Hammer Drill & Bits: (1/4", 3/8", 1/2" Anchors; 4" Length Minimum)
	Chain Fall: 2,000 lb. (907 kg) Capacity* (Minimum)		Open or Box-End Wrenches to 1-5/16"
	Scissor Lift (optional but helpful)		Electric Drill and Drill Bits
	Fork Lift: 2,000 lb. (907 kg) Lifting Capacity* (Minimum)		Allen Wrenches to 3/8"
	Step Ladder(s)		Tap set: 1/4-20 to 3/4-10
	Come-Along Tool		Sledge Hammer
	Disk Grinder		Hack-Saw, Reciprocating Saw, or Portable Band-Saw
	"C" Clamps		Extension Cords
	Drift Punch		Chalk Snap-Line
	Carpenter's Framing Square		Plumb Bobs
	Spirit Level: 4' (1219mm) Long		25' (7620mm) Measuring Tape
	Vacuum		Rags
	String		Fire Extinguisher
	Pry bar		Portable Light

**Larger Vertical Reciprocating Conveyors (VRCs) may require a heavier lifting capacity.*

PFLOW INDUSTRIES MATERIAL HANDLING SOLUTIONS
www.pflow.com
P 414 352 9000
F 414 352 9002
6720 N. Teutonia Ave.
Milwaukee, WI 53209

Before You Begin

Read this entire manual.

Pre-Installation Responsibilities

Proper preparation of the job site before beginning the installation can mean the difference between an installation that is safe and smooth and an installation that is difficult. Being aware of who is responsible for the listed activities will make sure the installation is a smooth process.

PFlow Industries, Inc. recommends that an installer with knowledge and experience on how to rig and erect structural steel discuss not only these items but all other concerns directly with the people on the job site.

A pre-installation job site visit is always recommended and considered to be included in the responsibilities of the mechanical installer.

End User Responsibilities

1. Assign the authorized on-site contact.
2. Provide the contact information for the authorized on-site contact.
3. Determine the work hours allowed to work on-site.
4. Arrange for other trades or in-plant production to avoid conflict with the proposed installation schedule or between trades.
5. Determine the work procedures and safety guidelines particular to the job site.
6. Communicate on-site safety meetings prior to beginning the installation.

End User and/or Mechanical Installer and/or Electrical Installer Responsibilities

1. Secure any required job site, local, or state permits before beginning the installation.
2. Determine if a local inspection and sign-off is required after the installation has been completed.
3. Unload and transport the equipment to the installation area.
4. Determine storage options (if applicable). Storing the equipment outside will void the warranty. If the equipment is stored indoors for a month or longer, consult PFlow Industries, Inc. for maintenance procedures required to keep the warranty in effect.
5. Prepare all necessary job site areas (e.g., pit, floor opening, adequate bracing locations, shaftway openings, doorways) for the installation.
6. Coordinate any job site or building modifications necessary to get the equipment to the installation area.
7. Determine if the weight and the size of the Vertical Reciprocating Conveyor (VRC) components exceed the lift requirements to handle and lift the heaviest load. If the weight of the load is in question, please contact the PFlow Industries, Inc. Product Support Department.
8. Locate the pick-point capable of lifting and handling the necessary VRC components.
9. Determine approved bracing locations and attachment points on the job site. Make sure that the bracing attachment points will withstand the static lateral load for bracing the lift. Details are called out on the GA drawing.
10. Make sure that the floor under the columns will withstand the base plate loading stated on the VSP spec sheet.

PFLOW INDUSTRIES MATERIAL HANDLING SOLUTIONS
www.pflow.com
P 414 352 9000
F 414 352 9002
6720 N. Teutonia Ave.
Milwaukee, WI 53209

Mechanical Installer Responsibilities

1. Conduct a pre-installation job site visit.
2. Review the General Arrangement (GA) drawing for any discrepancies between the GA drawing and the job site.
3. Compare the dimensions listed on the GA drawing to the dimensions on the actual job site.

NOTE *Discrepancies in the pit length, pit width, pit depth, overhead clearances, and a pit that is not square are just a few items that could create a problem. These discrepancies must be addressed immediately with PFlow Industries, Inc.*

4. Report any discrepancies to the PFlow Industries, Inc. Product Support Department.
5. Determine if additional bracing material is required.
6. Complete mechanical erection of the equipment as sold by PFlow Industries, Inc. and called out on the GA drawing, and follow all instructions in the installation manual and safe work procedures.
7. Mount all electrical devices at non-union job sites.
8. Return trip upon completion of the electrical installation and be present for the final checkout, adjustments, and training. Complete and return the Installation Completion Checklist to PFlow Industries, Inc. Product Support Department at psd@pflow.com

Electrical Installer Responsibilities

1. Review the General Arrangement (GA) drawing for any discrepancies between the GA drawing and the job site.
2. Report any discrepancies to the PFlow Industries, Inc. Product Support Department.
3. Complete electrical connection of the equipment as sold by PFlow Industries, Inc. and shown on the electrical drawings and GA drawing.
4. Follow all instructions in the installation manual and safe work procedures.
5. Be present for the final checkout, adjustments, and training. Complete and return the Installation Completion Checklist to PFlow Industries, Inc. Product Support Department at psd@pflow.com

PFLOW INDUSTRIES MATERIAL HANDLING SOLUTIONS
www.pflow.com
P 414 352 9000
F 414 352 9002
6720 N. Teutonia Ave.
Milwaukee, WI 53209

Before You Begin

Read this entire manual.

General Arrangement (GA) Drawing

Job site conditions may be different than those listed on the GA drawing. This drawing includes configuration and dimensional data specific to the job site:

- Job number
- Equipment dimensions
- Clearance dimensions
- Static lateral load
- Applicable options

The VRC can only be used according to the specifications given in this manual and the General Arrangement (GA) drawing. If the VRC is to be used outside the original design, contact the PFlow Industries, Inc. Product Support Department to determine if the intended use is possible.

⚠WARNING

Inappropriate and/or modified use of the VRC can result in dangerous safety issues and/or damage. If this VRC needs to be modified in any way, contact PFlow Industries, Inc. for assistance. Do not make any unauthorized changes.

Obtain written confirmation from PFlow Industries, Inc. before using the VRC in a modified or unspecified manner. PFlow Industries, Inc., cannot be held liable for any accidents and/or damages that may occur through inappropriate or unauthorized use of the VRC.

1. Locate the PFlow Industries, Inc. GA drawing in the shipping packet inside the parts crate.
2. Review the GA drawing for any discrepancies.
3. Compare the dimensions listed on the GA drawing to the dimensions of the actual job site and the materials received.

NOTE *Discrepancies in the pit length, pit width, pit depth, overhead clearances, and a pit that is not square are just a few items that could create a problem. These discrepancies must be addressed immediately with PFlow Industries, Inc.*

4. Report any discrepancies to the PFlow Industries, Inc. Product Support Department.

Contact the PFlow Industries, Inc. Product Support Department with any questions or concerns at any time throughout the installation of this equipment.

Sample GA Drawing

The sample drawing shown is only an example and is not applicable to this VRC.

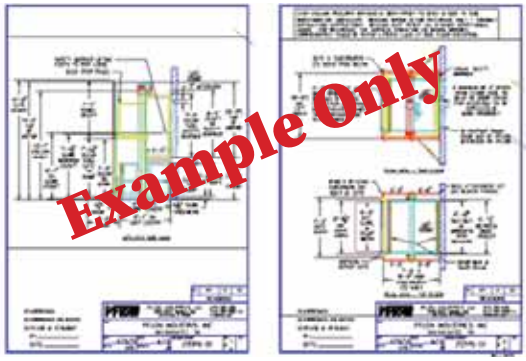

MATERIAL HANDLING SOLUTIONS
www.pflow.com
P 414 352 9000
F 414 352 9002
6720 N. Teutonia Ave.
Milwaukee, WI 53209

PFLOW INDUSTRIES MATERIAL HANDLING SOLUTIONS
www.pflow.com
P 414 352 9000
F 414 352 9002
6720 N. Teutonia Ave.
Milwaukee, WI 53209

Frequently Asked Questions

Proper preparation of the job site before beginning the installation can mean the difference between an installation that is smooth and an installation that is difficult. PFlow Industries, Inc. has prepared a list of site specific questions to investigate:

1. Is 3-phase power available for the installation work?
2. Is welding permitted?
3. Is a “hot permit” required?
4. Is a fire watch required? Are there special welding requirements (e.g., special coatings such as epoxy paint, or hot dipped galvanized steel)?
5. Are there any protrusions or rough spots in the floor level or wall space that could interfere with the installation or the operation?
6. Are the floors level?
7. Can the equipment pass through all openings, doorways, hallways, and shaftway openings?
8. Is there other non-PFlow Industries, Inc. equipment to be integrated with the PFlow Industries, Inc. VRC components?
9. Is a job specific bracing drawing required?
10. Is the work site union or non-union?
11. Is the customer’s forklift available for use?
12. Do the weight and size of the Vertical Reciprocating Conveyor (VRC) components exceed the capability of the on-site equipment to handle and lift the VRC components? If the weight of the load is in question, contact the PFlow Industries, Inc. Product Support Department.
13. Is there a pick-point capable of lifting the necessary lift components?

Contact the PFlow Industries, Inc. Product Support Department with any questions or concerns at any time throughout the installation of this equipment.

MATERIAL HANDLING SOLUTIONS
www.pflow.com
P 414 352 9000
F 414 352 9002
6720 N. Teutonia Ave.
Milwaukee, WI 53209

PFLOW INDUSTRIES MATERIAL HANDLING SOLUTIONS
www.pflow.com
P 414 352 9000
F 414 352 9002
6720 N. Teutonia Ave.
Milwaukee, WI 53209

Sequence Of Installation

The next few pages are only an example of the sequence of installation for an open mezzanine application. Refer to the detailed instructions for each sequence included in the installation manual.

Inspect Delivery

Read Installation Manual and GA

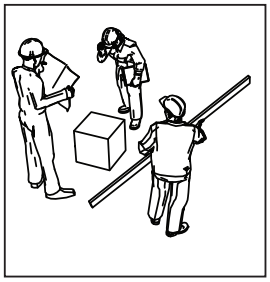

Mark Alignment

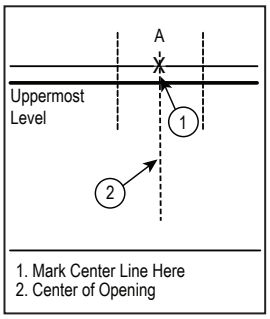

Position Carriage

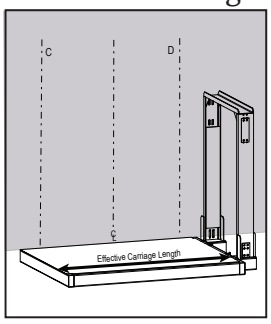

Raise 1st Column, Secure Temporarily, Plumb, and Align

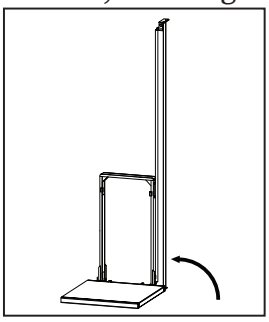

Insert Wheelblocks in the 1st column

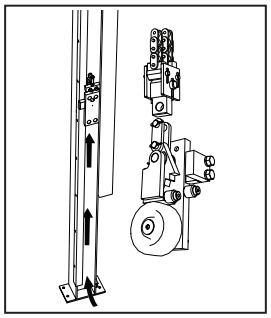

Attach Carriage

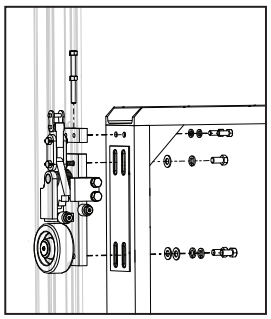

Raise 2nd Column, Secure Temporarily, Plumb, and Align

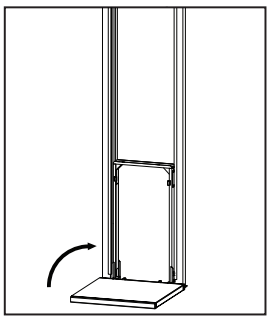

Insert Wheelblocks in the 2nd Column

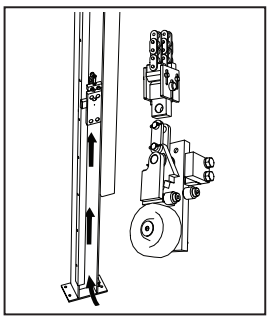

PFLOW INDUSTRIES MATERIAL HANDLING SOLUTIONS
www.pflow.com
P 414 352 9000
F 414 352 9002
6720 N. Teutonia Ave.
Milwaukee, WI 53209

Attach Carriage

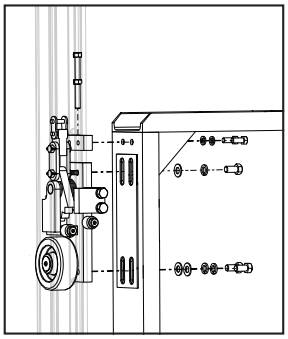

Check Gap

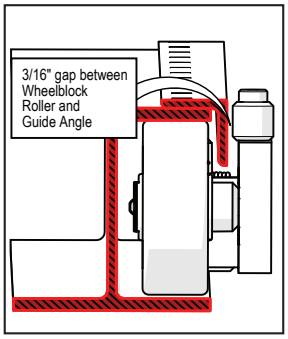

Check Guide Angle to Guide Angle

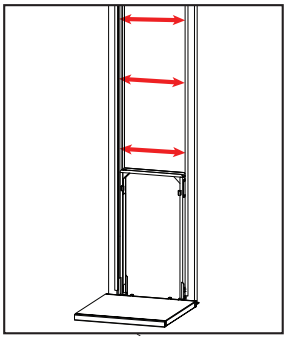

Bolt Columns

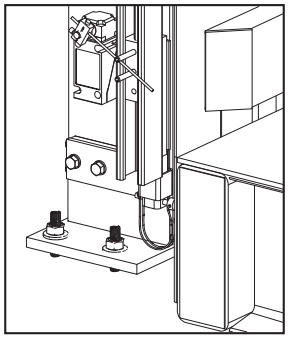

Attach Drivebase

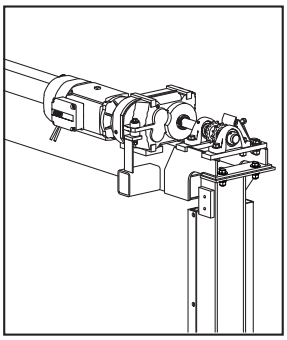

Check Guide Angle to Guide Angle

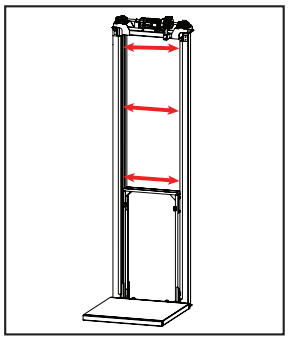

Install Chains

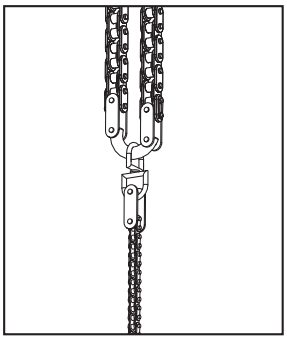

Install and Adjust Slack Chain Sensors

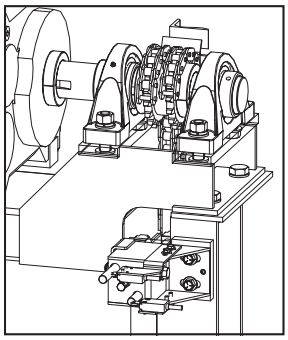

Install and Adjust Chain Tensioners

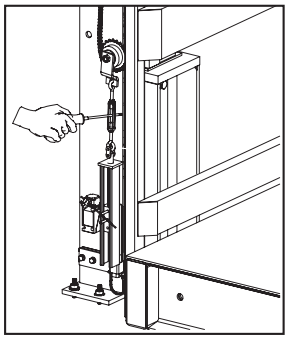

PFLOW INDUSTRIES MATERIAL HANDLING SOLUTIONS
www.pflow.com
P 414 352 9000
F 414 352 9002
6720 N. Teutonia Ave.
Milwaukee, WI 53209

Attach Limit Switches

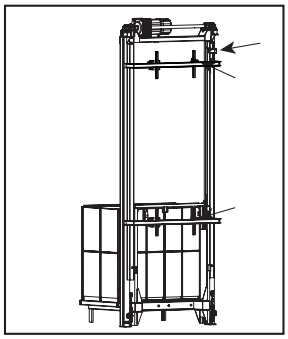

Assemble Gates

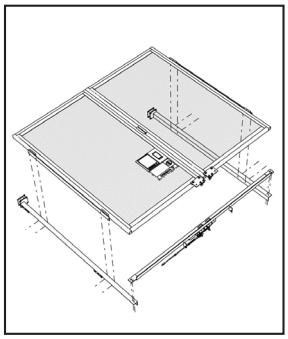

Position Gates and Secure Gate Posts

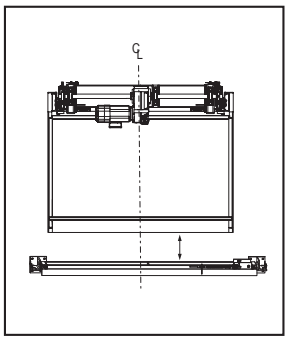

Plumb Gates

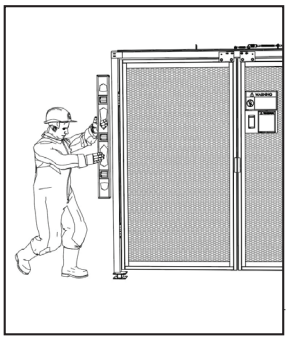

Brace and Weld Gates

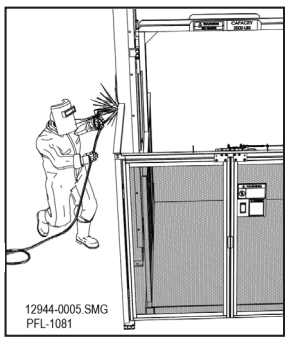

Install Keepers

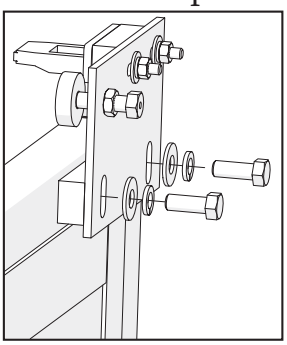

Install Interlocks

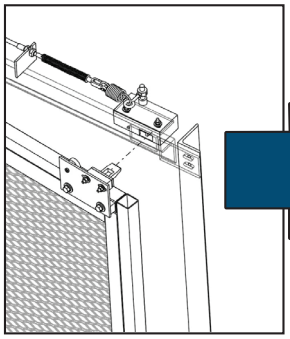

Install Interlock Cables

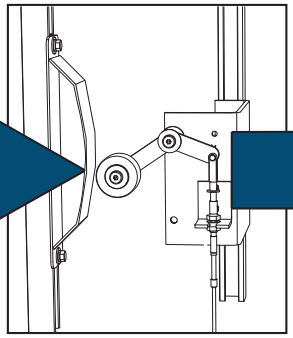

Install Final Bracing

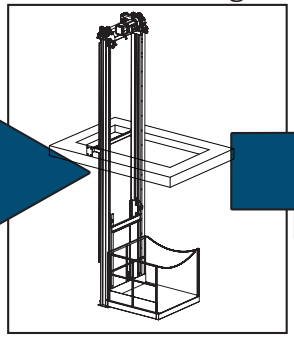

Install Enclosures

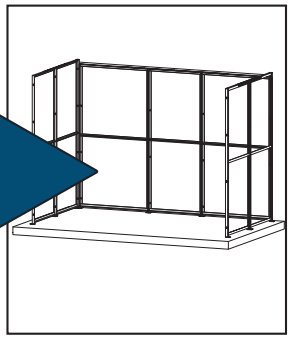

PFLOW INDUSTRIES MATERIAL HANDLING SOLUTIONS
www.pflow.com
P 414 352 9000
F 414 352 9002
6720 N. Teutonia Ave.
Milwaukee, WI 53209

Attach Signage

Electrical Wiring

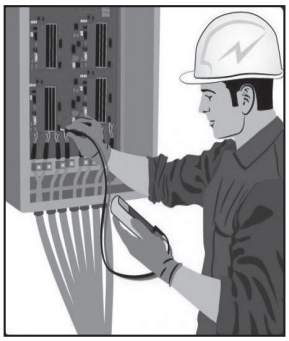

Start-Up

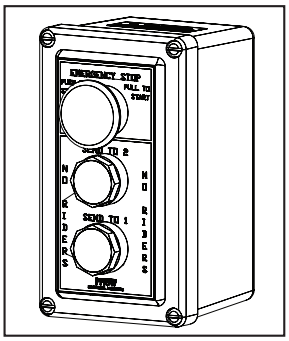

Checklist

Complete the Questionnaire

PFLOW INDUSTRIES MATERIAL HANDLING SOLUTIONS
www.pflow.com
P 414 352 9000
F 414 352 9002
6720 N. Teutonia Ave.
Milwaukee, WI 53209

Before You Begin

Read this entire manual. Before starting the installation, verify the job site dimensions and the dimensions of the delivered materials against the PFlow Industries, Inc. General Arrangement (GA) drawing. If the site conditions or the delivered materials do not match the GA drawing, please consult the PFlow Industries, Inc. Product Support Department.

⚠ DANGER

Falling column hazard! The installation of this equipment requires a qualified installer with extensive knowledge and experience on how to rig, erect, and support structural steel.

NOTICE

ASME B20.1 defines a qualified person as a person who, by possession of a recognized degree or certificate of professional standing, or by extensive knowledge, training, and experience, has successfully demonstrated his/her ability to solve problems relating to the subject matter and work.

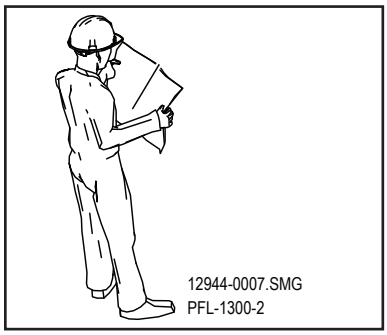

Verify Site Dimensions Figure 11-1

Verify Job Site Dimensions and Carriage Orientation

The Vertical Reciprocating Conveyor (VRC) was built using dimensions supplied to PFlow Industries, Inc. as listed on the General Arrangement drawing (e.g., floor-to-floor distance, pit depth, upper level opening, etc.).

These instructions are representative of an open mezzanine installation in which the carriage is placed in position before the columns are placed in position.

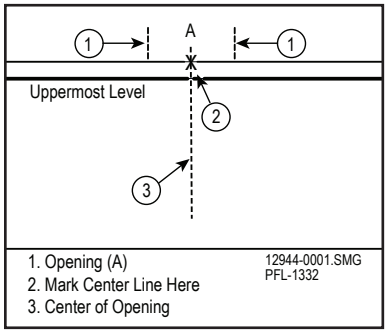

Initial Layout Figure 11-2

Mark Alignment

1. Verify that the column installation (e.g., no spliced columns, no restricted shaftway, etc.) allows the carriage to be placed before the columns are installed.
2. Mark the center line position of the opening at the uppermost level. See Figure 11-2.
3. To allow clearance for carriage movement, drop a plumb line from the uppermost level on the center line of the opening (Point A). The plumb line must be 1" (25mm) beyond the furthest protrusion. See Figure 11-3.
4. Clearly mark the tip of the plumb bob on the first floor. Point B is the center point of the carriage at the lower level. See Figure 11-4.

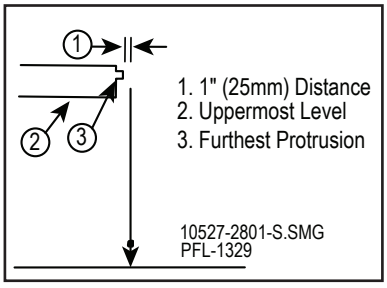

Floor-to-Floor Alignment Figure 11-3

NOTICE

All protrusions from the floor, wall, or other areas must be removed. Plumb lines must be positioned 1" (25mm) beyond the furthest protrusion or the carriage will not move beyond the protrusion after installation. The floor may need to be extended to get the proper distance from the floor to the carriage.

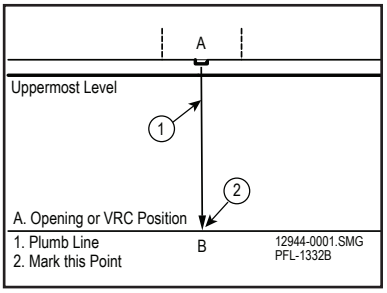

Mark Lower Floor Figure 11-4

MATERIAL HANDLING SOLUTIONS
www.pflow.com
P 414 352 9000
F 414 352 9002
6720 N. Teutonia Ave.
Milwaukee, WI 53209

Mark Alignment (continued)

5. Drop two plumb lines from the uppermost level roughly 2' (1219mm) on each side of the center line. The plumb line must be 1" (25mm) beyond the furthest protrusion. See Figure 11-5.
6. Locate the three marks on the first floor. Snap a chalk line between C and D. See Figure 11-6.

NOTICE

Setting the carriage on 4" x 4" (102mm x 102mm) blocks approximately 6" (152mm) long will allow the chains and chain tensioner to be attached and leveled without waiting for power.

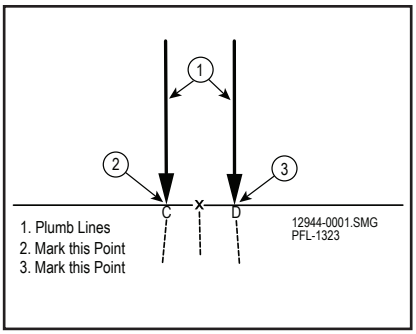

Align Floor-to-Floor Figure 11-5

Position the Carriage

1. Align the edge of the carriage on the snap line.
2. Align the center of the effective carriage deck to the center line floor marks. See Figure 11-6 and Figure 11-7.
3. When a pit is present, level the carriage deck to match the first floor level landing, shimming the underside if necessary.
4. Temporarily secure the carriage from moving by welding the carriage to the building structure, welding temporary anchors, or welding side tabs.

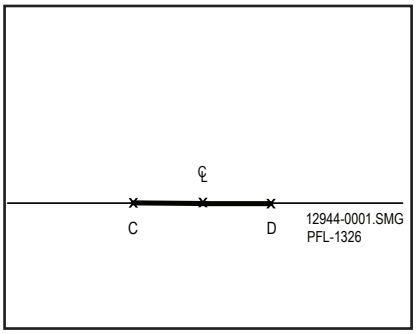

Align Lower Floor Figure 11-6

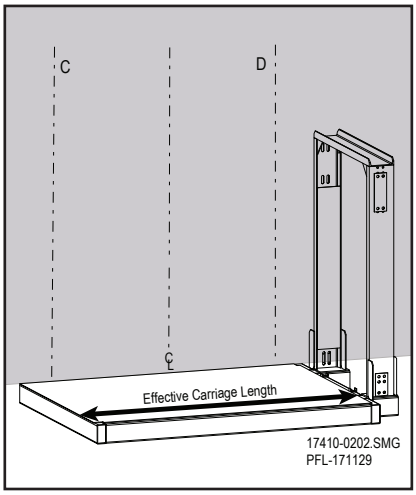

Place Carriage Figure 11-7

MATERIAL HANDLING SOLUTIONS
www.pflow.com
P 414 352 9000
F 414 352 9002
6720 N. Teutonia Ave.
Milwaukee, WI 53209

Before You Begin

Read this entire manual.

Before starting the installation, verify the column orientation, drivebase orientation, job site dimensions, and the dimensions of the delivered materials against the PFlow Industries, Inc. General Arrangement (GA) drawing. If the site conditions or the delivered materials do not match the GA drawing, please consult the PFlow Industries, Inc. Product Support Department.

Before assembling any VRC components, review Section 13 for approved bracing guidelines.

⚠ DANGER

Falling column hazard! The installation of this equipment requires a qualified installer with extensive knowledge and experience on how to rig, erect, and support structural steel.

NOTICE

ASME B20.1 defines a qualified person as a person who, by possession of a recognized degree or certificate of professional standing, or by extensive knowledge, training, and experience, has successfully demonstrated his/her ability to solve problems relating to the subject matter and work.

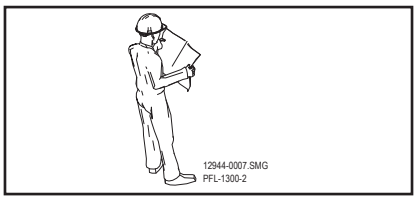

Verify Dimensions Figure 12-1

Purpose

The Vertical Reciprocating Conveyor (VRC) is designed for the movement of materials only, up to its rated capacity, from one level to the next.

This section describes the installation of the wheelblocks, columns, carriage, drivebase, lift chains, and chain tensioners.

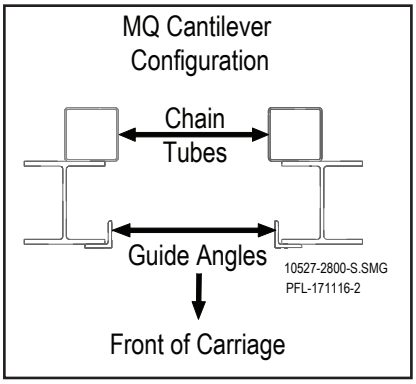

Verify Orientation Figure 12-2

Confirm the Orientation of Each Column

Refer to the PFlow Industries, Inc. General Arrangement (GA) drawing to confirm the correct orientation of each guide column and the guide angle to guide angle dimension. Contact the PFlow Industries, Inc. Product Support Department immediately concerning any discrepancies. See Figure 12-1.

MQ Cantilever Configuration Column Guidelines

Each guide column must be correctly installed. There is only one correct orientation.

The guide column face (flange) is positioned with the guide angle on the inside of the VRC and the chain tube facing the back of the VRC. See Figure 12-2 and Figure 12-3.

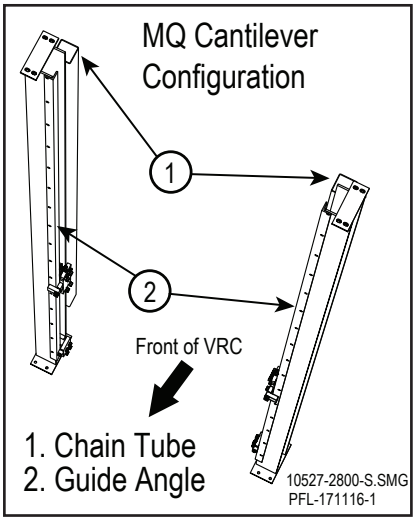

Verify Orientation Figure 12-3

PFLOW INDUSTRIES MATERIAL HANDLING SOLUTIONS
www.pflow.com
P 414 352 9000
F 414 352 9002
6720 N. Teutonia Ave.
Milwaukee, WI 53209

Spliced Column Guidelines

This VRC may have spliced columns. These instructions are for standard 6" (152mm) flange columns. For other types of flange columns, see job specific drawings at the end of the installation manual.

If the spliced pieces of the columns are not assembled properly, the drivebase assembly is not level at the top of the columns.

Match marks are added to the spliced columns to indicate the sequence the columns are to be reassembled. If there is any confusion regarding the match marks or location of the columns, please contact PFlow Industries, Inc. for clarification. See Figure 12-4.

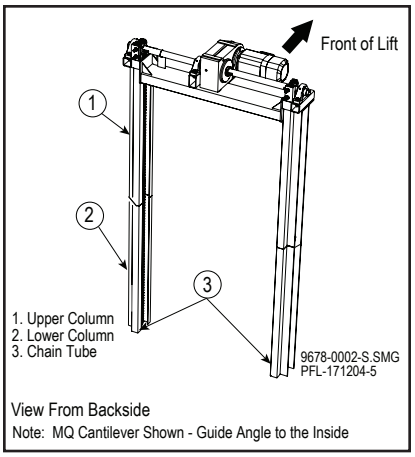

Columns Match Marked
Figure 12-4

NOTICE

If there are more than two spliced pieces per column, see Figure 12-5 to determine placement of the spliced pieces.

NOTE *Assembly is usually done vertically. It may be possible to fully assemble and weld the columns on the ground. However, it may not be possible to erect the full length spliced column.*

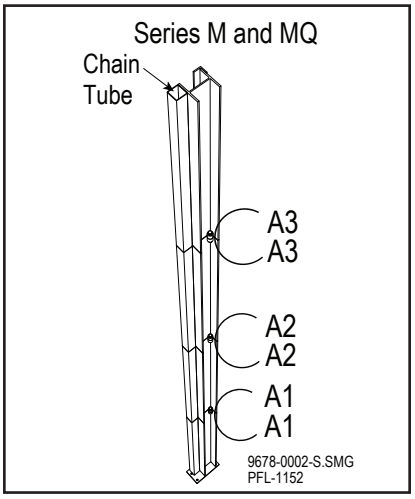

Columns Match Marked
Figure 12-5

DANGER

Falling column hazard! Properly support and temporarily brace the columns during spliced column assembly. The alignment bolts are used only to align the sections of the columns prior to welding. The alignment bolts are not strong enough to support the columns.

Assemble the Spliced Columns

1. Match the spliced pieces of the column. See Figure 12-5 and Figure 12-6.
2. Remove the alignment bolts, lock washers, and nuts from the alignment tube.
3. Insert the alignment bolt into the two (2) alignment tubes. See Figure 12-6.
4. Add a lock washer and nut to the alignment bolt and tighten.
5. If assembling the columns in the upright position, temporarily brace all sections of the column.
6. Continue to bolt the remaining spliced column pieces together.

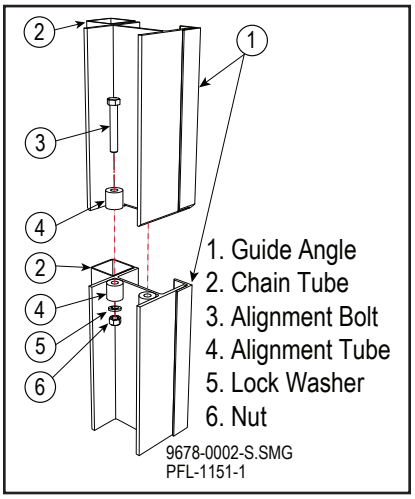

Assemble Matched Columns
Figure 12-6

Assemble the second column using steps 1-6.

PFLOW INDUSTRIES MATERIAL HANDLING SOLUTIONS
www.pflow.com
P 414 352 9000
F 414 352 9002
6720 N. Teutonia Ave.
Milwaukee, WI 53209

Align the Spliced Column

Proper alignment is critical to the installation and operation of the VRC. The column is to be aligned from two directions and needs two (2) strings. See Figure 12-7.

1. Attach two (2) strings from the top to the bottom of the column, perpendicular to each other. Make sure both strings are taut.
2. Keep the same distance at all attachment points.
3. Measure between the string and the guide angle at multiple points along the length of the column.
4. Maintain an equal distance between the string and the guide angle down all column sections. Correct any discrepancies.

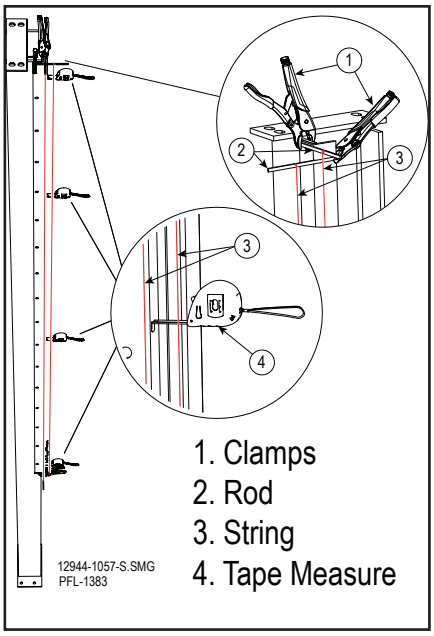

Spliced Column Alignment Figure 12-7

Tack Weld the Spliced Column

Welding must be completed according to the standards and guidelines of the latest edition of AWS D1.1.

Weld filler material must be a minimum of E60xx.

Weld filler material must be a minimum of E60xx.

NOTICE

To avoid column twist, avoid excessive heat while welding. Weld in a manner to allow the heat to dissipate.

1. Do not weld the column flange surface located behind the guide angle. See the circled area in Figure 12-8.
2. Tack weld on three sides of the chain tube. See Figure 12-8.

NOTICE

The chain tube is a chain guard, not a structural member. The chain tube is thin walled. Be careful to avoid burning through the chain tube when welding.

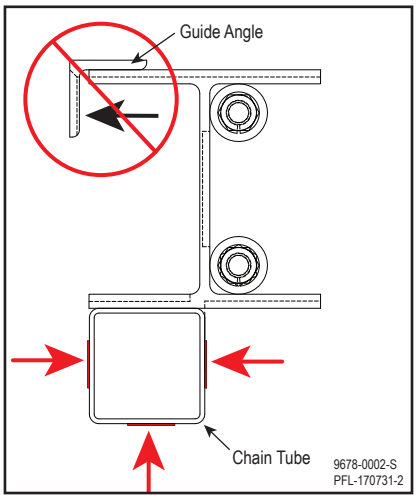

Welding Notes Figure 12-8

MATERIAL HANDLING SOLUTIONS
www.pflow.com
P 414 352 9000
F 414 352 9002
6720 N. Teutonia Ave.
Milwaukee, WI 53209

Spliced Column Finish Welding Details

1. Finish weld all splice joints per the welding details shown in Figure 12-9.
2. Grind the welded area flat on both surfaces of the guide angle to allow the wheelblock shoe and guide roller enough clearance for vertical carriage travel.
3. Grind the surface of the column where the wheel block travels flat and smooth.
4. Clean and clear any weld splatter from the inside of the guide angle surface.
5. Clean and clear any weld splatter from the inside of the column surfaces.
6. Clean and paint all welded areas.

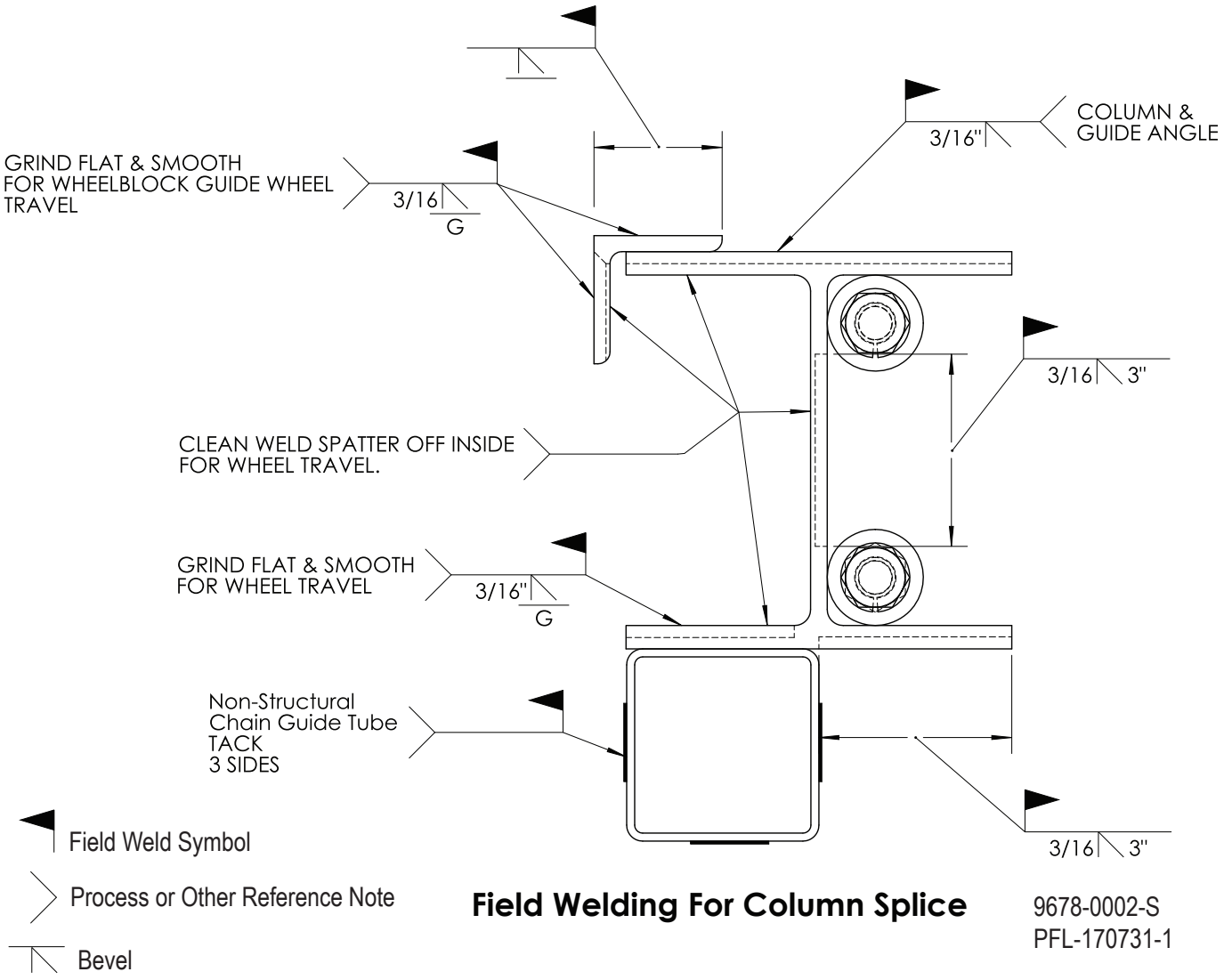

Welding Notes Figure 12-9

PFLOW INDUSTRIES MATERIAL HANDLING SOLUTIONS
www.pflow.com
P 414 352 9000
F 414 352 9002
6720 N. Teutonia Ave.
Milwaukee, WI 53209

⚠ DANGER

Falling column hazard! Properly support the columns during installation. Do not assume that the bolted connection on the carriage and wheelblocks will prevent the columns from falling.

NOTE *VRCs with a lift chain size of #50 **and** either a FA67 (SEW) reducer or a SR3282 (NORD) reducer will include UHMW chain guide blocks pre-installed at the top of each column just above the chain tube. See Figure 12-10. If missing, contact PFlow Industries, Inc. Product Support Department.*

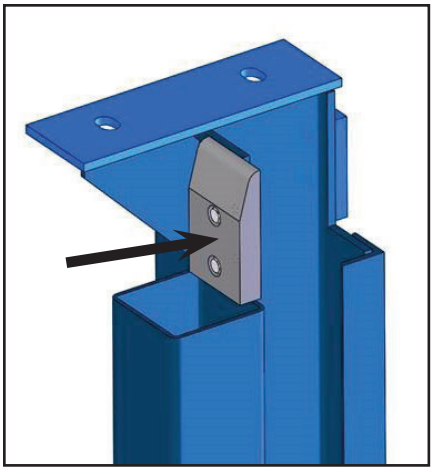

Chain Deflector Block Figure 12-10

Raise and Secure the Column

1. Prepare to raise the first column into position.
2. Review the top of the column for the presence of chain deflector blocks. See Figure 12-10.
3. Review the weight of the column and the drivebase to confirm that the pick point will withstand the weight.
4. Use a suitable hoisting system that complies with local regulations.
5. Put a sling around the column using proper rigging techniques and attach the lifting device.
6. Carefully and slowly lift the column to an upright position.
7. Move the column closer to the carriage — about 6" (152mm) away and secure the column. See Figure 12-11.
8. Make sure the column is secure and cannot fall until permanent bracing is installed.

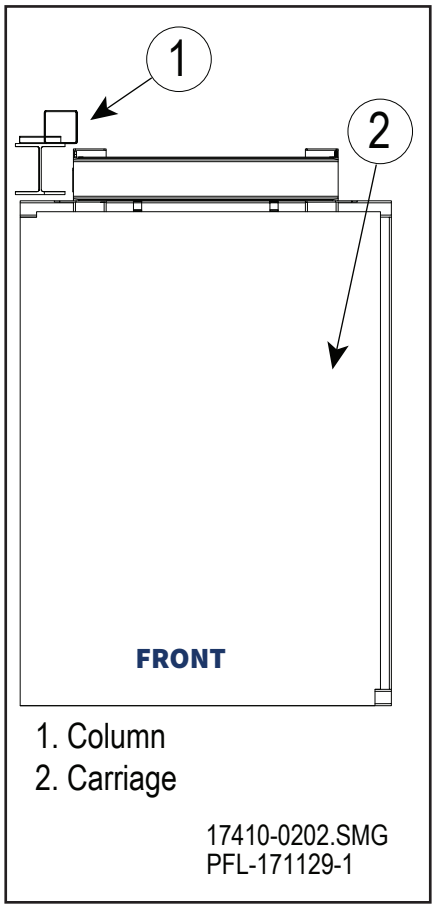

Column Placement Figure 12-11

PFLOW INDUSTRIES MATERIAL HANDLING SOLUTIONS
www.pflow.com
P 414 352 9000
F 414 352 9002
6720 N. Teutonia Ave.
Milwaukee, WI 53209

WARNING

Crush hazard! The safety cam on the wheelblock is spring-tensioned and can crush fingers if it unexpectedly rotates. Keep hands and fingers away from the cam area.

Prepare the Upper Wheelblock

1. Remove the six (6) hex head screws from the upper wheelblocks and the outer guide roller. See Figure 12-12.
2. Remove the wheelblock shoe. See Figure 12-13.
3. Use an allen wrench to remove the outer guide roller. See Figure 12-13.
4. Carefully rotate the spring tensioned safety cam vertically. See Figure 12-13.
5. Insert the 5/8"-11 x 1.5" setscrew (provided) from the back side of the wheelblock into the tapped hole in the base and tighten against the safety cam behind the pin to lock the safety cam vertically in place. See Figure 12-14 and Figure 12-15.

NOTE *Locking the safety cam vertically in place will make the wheelblock installation easier.*

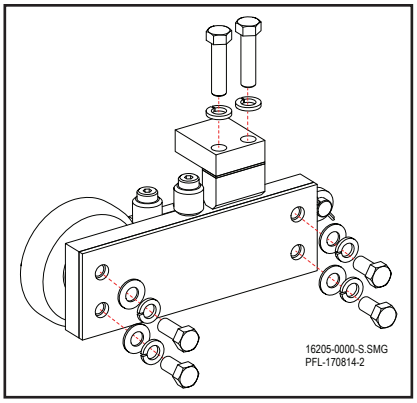

Remove Hex Head Screws Figure 12-12

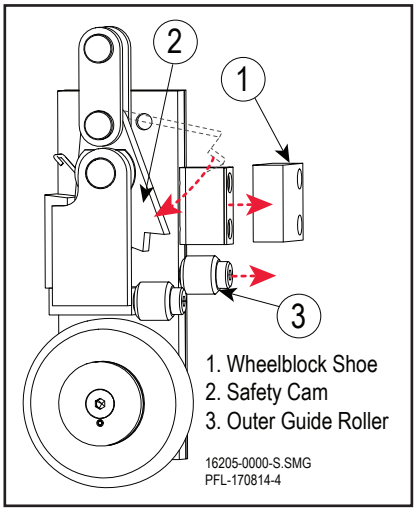

Rotate the Safety Cam Figure 12-13

WARNING

Carriage drop hazard! Before operating the VRC, replace the setscrew in the safety cam with the previously removed hex head screw and washer. Otherwise the safety cam will not function.

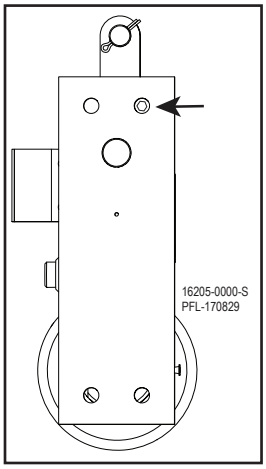

Insert Setscrew Figure 12-14

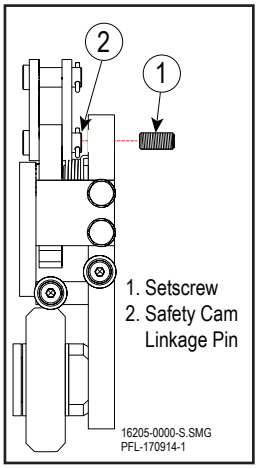

Insert Setscrew Figure 12-15

PFLOW INDUSTRIES MATERIAL HANDLING SOLUTIONS
www.pflow.com
P 414 352 9000
F 414 352 9002
6720 N. Teutonia Ave.
Milwaukee, WI 53209

Insert the Wheelblocks

1. With the wheel facing the inside of the column, insert the upper wheelblock in the column through the notch in the guide angle at the base of the column. See Figure 12-16.
2. Slide the upper wheelblock up inside the column to about the height of the slots in the carriage uprights. See Figure 12-17.
3. Temporarily secure the upper wheelblock to the column.
4. Reattach the wheelblock shoe and the outer guide roller. See Figure 12-18.
5. Remove the hex head screws on the lower wheelblock.
6. With the wheel facing the inside of the column, insert the lower wheelblock. See Figure 12-19.

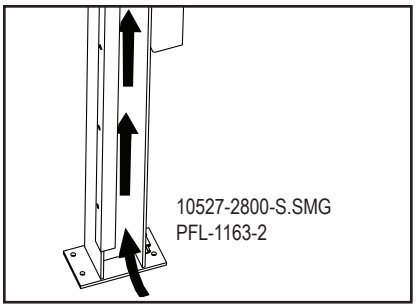

Insert Upper Wheelblock Figure 12-16

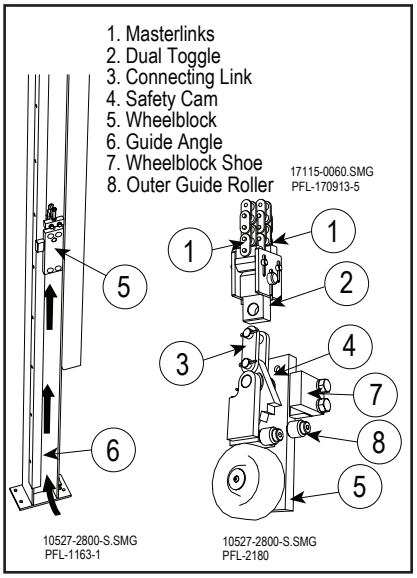

Insert Upper Wheelblock Figure 12-17

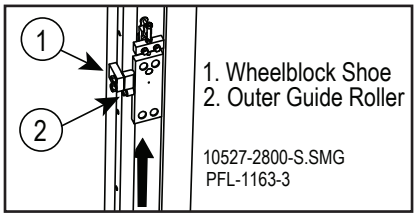

Reattach Shoe and Roller Figure 12-18

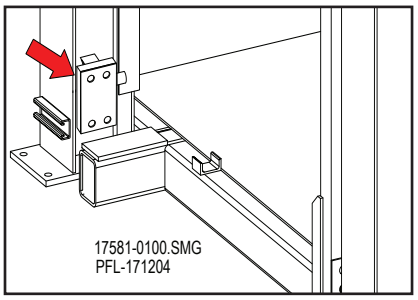

Insert Lower Wheelblock Figure 12-19

MATERIAL HANDLING SOLUTIONS
www.pflow.com
P 414 352 9000
F 414 352 9002
6720 N. Teutonia Ave.
Milwaukee, WI 53209

Attach the Upper Wheelblock

1. Install the jackscrew block assembly to the carriage upright above the upper wheelblock. See Figure 12-20.
2. Carefully slide the upright column closer to the carriage.
3. The upper wheelblock should be installed at the middle of the upright adjusting slots. Loosely bolt the upper wheelblock to the carriage upright using three (3) of the hex head screws previously removed. ***A minimum thread engagement of 5/8" is required for the wheelblock connection.*** Leave the setscrew in place at this time. See Figure 12-20.

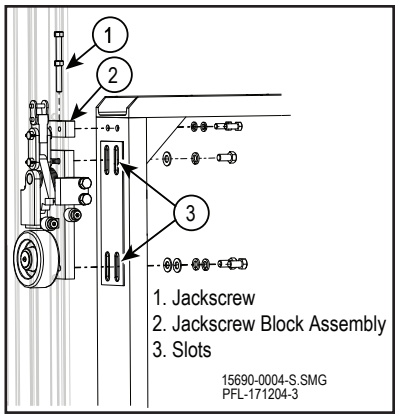

Upper Wheelblock Mounting Figure 12-20

Attach the Lower Wheelblock

1. Loosely bolt the lower wheelblock to the carriage upright using the four (4) hex head screws previously removed. See Figure 12-21.
2. Make certain that the column is properly secured to avoid toppling before installing the next column.

NOTE *Further adjustment is necessary to complete alignment.*

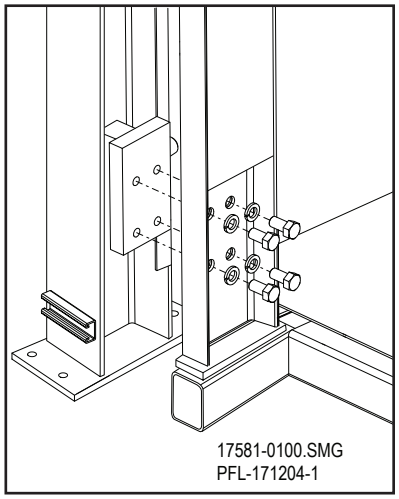

Lower Wheelblock Mounting Figure 12-21

MATERIAL HANDLING SOLUTIONS
www.pflow.com
P 414 352 9000
F 414 352 9002
6720 N. Teutonia Ave.
Milwaukee, WI 53209

⚠ DANGER

Falling column hazard! Properly support the columns during installation. Do not assume that the bolted connection on the carriage and wheelblocks will prevent the columns from falling.

Raise and Secure the 2nd Column

To raise and secure the 2nd column, repeat the same procedures outlined on Section 12, page 5 through page 8.

- Insert the Wheelblocks
- Attach the Upper Wheelblock
- Attach the Lower Wheelblock

Verify the Guide Angle to Guide Angle Alignment

Refer to the PFlow Industries, Inc. General Arrangement (GA) drawing to confirm the guide angle to guide angle dimension. Contact the PFlow Industries, Inc. Product Support Department immediately concerning any discrepancies.

NOTICE

Column alignment is ***critical*** for proper VRC operation. Alignment between the column guide angles must be verified during and after column installation.

1. Measure the distance between guide angle to guide angle. See Figure 12-22.
2. Verify the distance at multiple locations along the columns. See Figure 12-23.
3. Maintain the same guide angle to guide angle dimension from the bottom of the VRC columns to the top of the VRC columns (+/- 1/16"). See Figure 12-23.

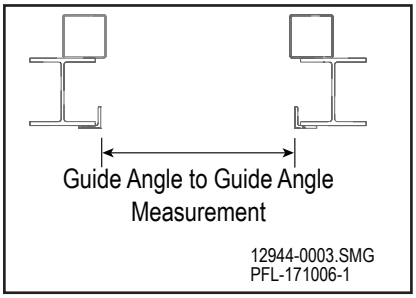

Guide Angle Measurement
Figure 12-22

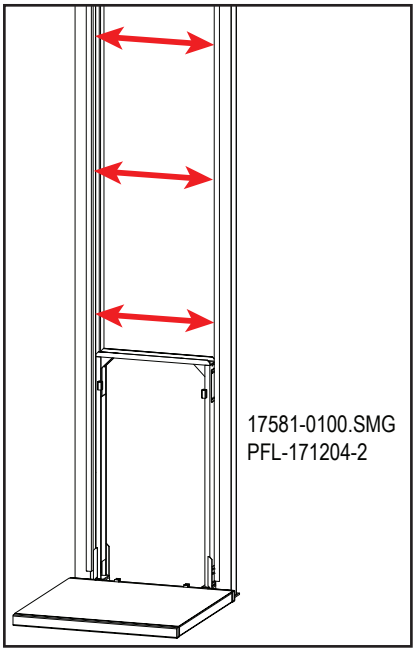

Verify Guide Angle Distance
Figure 12-23

PFLOW INDUSTRIES MATERIAL HANDLING SOLUTIONS
www.pflow.com
P 414 352 9000
F 414 352 9002
6720 N. Teutonia Ave.
Milwaukee, WI 53209

Review the Column for Plumb

1. Make sure the column is plumb from front to back and side to side. See Figure 12-24.
2. Make sure the inside of the wheelblock shoe and the outside of the guide angle are parallel to each other.
3. Correct and eliminate any column twist.

NOTICE

Column twist must be avoided. If the gap between the wheelblock shoe and the face of the guide angle changes from left to right of the shoe block, the column may need to be adjusted to get an even gap.

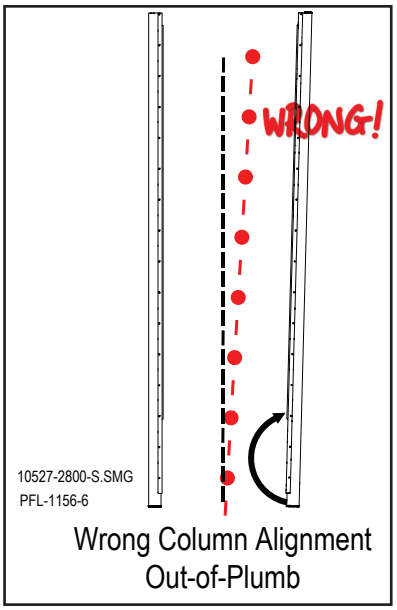

Column Alignment Out-of-Plumb
Figure 12-24

Anchor the Column

1. Verify the proper floor anchor size and type for the job site. Special conditions (e.g., seismic site location) require that proper anchoring and bracing methods are used.
2. When the column is plumb, anchor the column base plates to the floor according to local or state codes especially in seismic zones. PFlow Industries, Inc. recommends 1/2" x 4" (13mm x 102mm) long wedge style anchors installed according to the manufacturers instructions. See Figure 12-25.

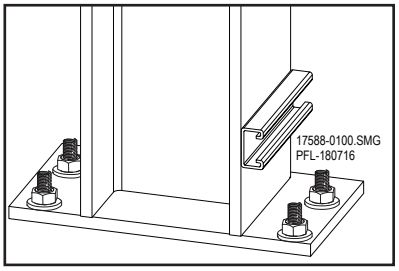

Anchor the Column Base Plates
Figure 12-25

Attach Temporary Bracing

Review the Bracing Instructions in Section 13 of this installation manual.

1. Verify GA and bracing drawing details prior to beginning field bracing work.

NOTICE

Bracing must resist all dynamic operational loads. The General Arrangement (GA) drawing states the estimated static lateral load that the bracing must support. Each column requires bracing in both front-to-back and side-to-side directions.

2. Permanently weld a mounting plate to the face of the floor or mezzanine, then tack weld the upper floor-to-column braces to the mounting plate. See Figure 12-26.
3. Verify that the gap from the column guide angle to the wheelblock guide roller is 3/16" (4,76mm). See Figure 12-27.

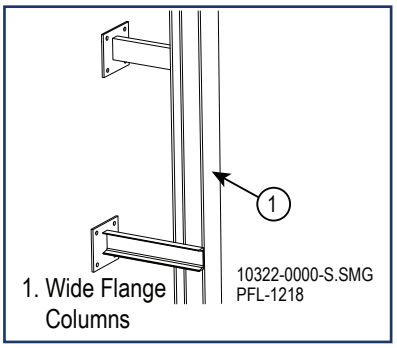

Tack Weld Bracing Figure 12-26

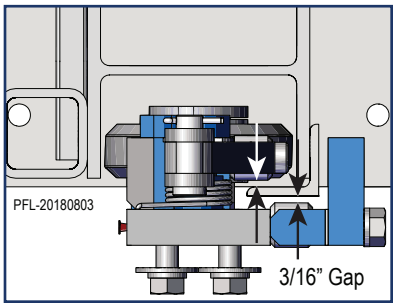

Verify Gap Figure 12-27

PFLOW INDUSTRIES MATERIAL HANDLING SOLUTIONS
www.pflow.com
P 414 352 9000
F 414 352 9002
6720 N. Teutonia Ave.
Milwaukee, WI 53209

⚠CAUTION

To prevent personal injury or damaging the drivebase, attach rigging to the drivebase assembly weldment only when lifting the drivebase assembly. Do not attach rigging to any drivebase assembly components (e.g., shaft, gear motor, pillow blocks, etc.).

Inspect the Oil Level

Inspect the oil level in the gear motor. Replenish as needed.

Install the Drivebase

1. Make sure the columns are firmly secured in place.
2. Review the weight of the drivebase assembly to confirm that the pick point will withstand the weight of the drivebase assembly.
3. Use a suitable lifting system that complies with local regulations.
4. Lift the drivebase assembly into position and place over the top of the guide columns. See Figure 12-28.
5. Align the drivebase assembly with the mounting pads at the top of the guide columns. See Figure 12-28.
6. Verify that the driveshaft is level. Shim if necessary. See Figure 12-28.
7. Install the hex bolts as shown in Figure 12-28. Snug bolts down to allow for final adjustments. ***Do not weld at this time.***

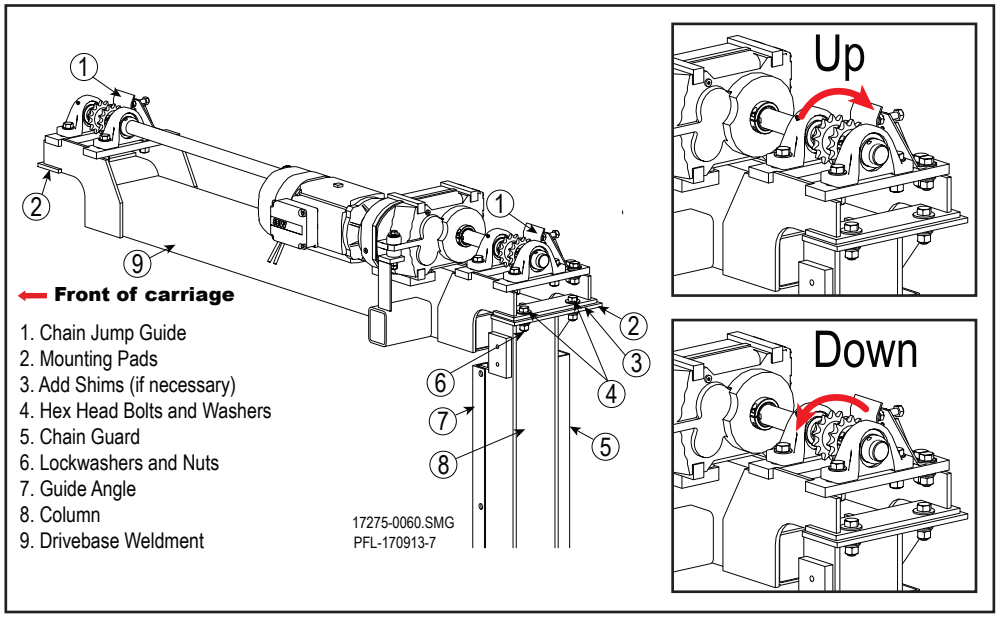

Drivebase Assembly Figure 12-28

PFLOW INDUSTRIES MATERIAL HANDLING SOLUTIONS
www.pflow.com
P 414 352 9000
F 414 352 9002
6720 N. Teutonia Ave.
Milwaukee, WI 53209

Review the Columns

Be sure to plumb and correct any column twist one column at a time.

1. Plumb each column on each side.
2. Reverify the guide angle to guide angle dimension at multiple locations along the columns. Make sure there is no column twist.
3. Review complete Bracing Instructions in Section 13 of this installation manual.

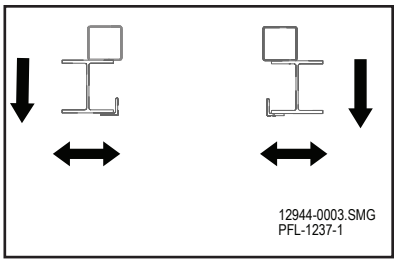

Review Columns for Plumb Figure 12-29

NOTICE Bracing must resist all dynamic operational loads. The General Arrangement (GA) drawing states the static lateral load that the bracing must support. Each column requires bracing in both front-to-back and side-to-side directions.

4. A job specific bracing drawing may be provided. Verify drawing details prior to beginning field bracing work.
5. Tack weld the upper floor-to-column braces to the face of the floor or mezzanine.
6. Recheck the guide angle to guide angle dimension and plumb. See Figure 12-29.
7. Verify the proper floor anchor size and type for the job site. Special conditions (e.g., seismic site location) require that proper anchoring and bracing methods are used.
8. If the columns are plumb, lag the column base plates to the floor according to local or state codes especially in seismic zones. PFlow Industries, Inc. recommends 1/2" x 4" (13mm x 102mm) long wedge style anchors.
9. Recheck the guide angle to guide angle dimension and verify that the gap from the column to the outside wheelblock guide roller is 3/16".
10. Fully field weld the column braces to the face of the upper floor or mezzanine.
11. Add side bracing and fully weld.
12. Recheck the columns guide angle to guide angle dimension and plumb.
13. Fully tighten and torque the 1/2-13 drivebase mounting bolts to 49 lb-ft. See Figure 12-30. ***Do not weld the drivebase assembly to the column at this time.***

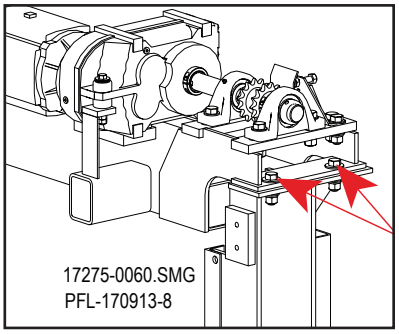

Tighten Hex Bolts Figure 12-30

PFLOW INDUSTRIES MATERIAL HANDLING SOLUTIONS
www.pflow.com
P 414 352 9000
F 414 352 9002
6720 N. Teutonia Ave.
Milwaukee, WI 53209

⚠ WARNING

Entanglement hazard! Remove gloves, secure long hair, wear snug-fitting clothing, and avoid wearing jewelry while working with chains.

Crush hazard! Keep hands outside and above the chain. If the lift chain does not reach the wheelblock, carefully work the lift chain around the sprocket until it does reach the wheelblock. Lift the chain from the sides. If the chain drops unaided, the weight of the chain will crush fingers. Do not allow the chain to come off the sprocket.

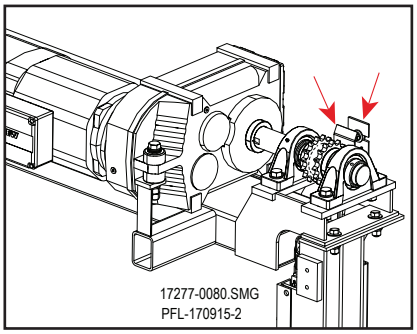

Remove Chain Jump Guide Figure 12-31

Install the Lift Chains

NOTE *The lift chain is usually packaged in 10' (3048mm) lengths. Depending on the required overall chain length, there may be four (4) smaller sections, one for each sprocket. For safety reasons, the lift chain is not interchangeable with standard ANSI chains.*

1. Remove the chain jump guide. See Figure 12-31.
2. Take a 10' (3048mm) section of the lift chain (larger chain) and place a 2' (610mm) section of the chain over one side of the dual sprocket just above the chain tube. Make sure the retaining clip side of the master link faces the carriage for easy access. See Figure 12-32.
3. Feed the 8' (2438mm) section of the lift chain down the guide angle side of the column.
4. Clamp and secure both sides of the lift chain to the sprocket to prevent the lift chain from falling down the column.
5. Repeat steps 2 through 4 for the second chain on the second sprocket.
6. Separate the #35 tensioner chain (some installations require #50) equally into two sections (one for each column).

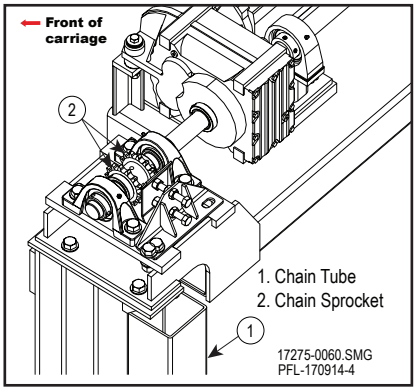

Place a Section Over the Chain Sprocket Figure 12-32

PFLOW INDUSTRIES MATERIAL HANDLING SOLUTIONS
www.pflow.com
P 414 352 9000
F 414 352 9002
6720 N. Teutonia Ave.
Milwaukee, WI 53209

Install the Lift Chains (continued)

7. Use the lift chain master links to attach the slack chain toggle to both of the 2' (610mm) section of the lift chains. See Figure 12-33.
8. Mount the tensioner chain to the swivel using a toggle master link and the tensioner chain master link. See Figure 12-33.
9. Mount the tensioner chain to the swivel using a toggle master link and the tensioner chain master link. See Figure 12-33.

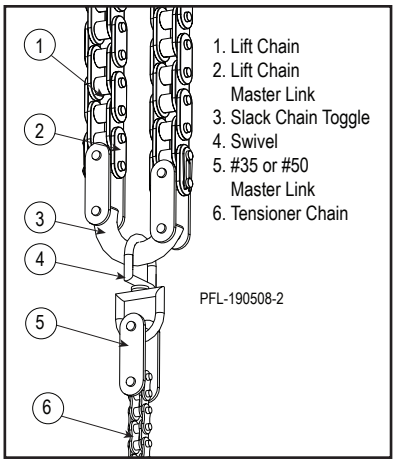

Attach the Tensioner Chain to the Lift Chain Figure 12-33

⚠ WARNING

Crush hazard! Keep hands outside and above the chain. If the lift chain does not reach the wheelblock, carefully work the lift chain around the sprocket until it does reach the wheelblock. Lift the chain from the sides. If the chain drops unaided, the weight of the chain will crush fingers. Do not allow the chain to come off the sprocket.

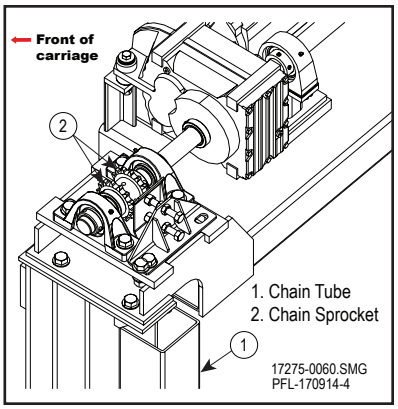

Drop the Tensioner Chain Down the Chain Tube Figure 12-34

10. Carefully drop the opposite end of the tensioner chain (without the swivel) down the chain tube. See Figure 12-34. Make sure the tensioner chain goes down the chain tube without any knots or kinks.
11. It may be necessary to slide the dual sprocket to the side to center the chains inside the chain tube. If necessary, loosen the set screws on each side of the sprocket. Move the dual sprocket to center the chains inside the chain tube. Add Loctite Blue #242 to the setscrews and tighten the setscrews to a defined torque setting shown below:

Setscrew Diameter	3/8"	1/2"
Torque ft/lbs	22	51

12. Remove the clamps on the lift chain.
13. Carefully work each lift chain over the sprocket so that approximately 30" (762mm) of lift chain with the tensioner chain attached is down the chain tube.

PFLOW INDUSTRIES MATERIAL HANDLING SOLUTIONS
www.pflow.com
P 414 352 9000
F 414 352 9002
6720 N. Teutonia Ave.
Milwaukee, WI 53209

Install the Lift Chains (continued)

14. Clamp and secure both sides of the lift chain to the sprocket to prevent the lift chain from falling down the column.
15. Join the next 10' (3048mm) section of the lift chain together with a lift chain master link. Remove the clamps on the lift chain and feed the lift chain down the guide angle side of the column.
16. Add Loctite Blue #242 to the setscrews on each side of the sprocket.

Repeat steps 14-16 for both sprockets until the lift chains reach the upper wheelblock.

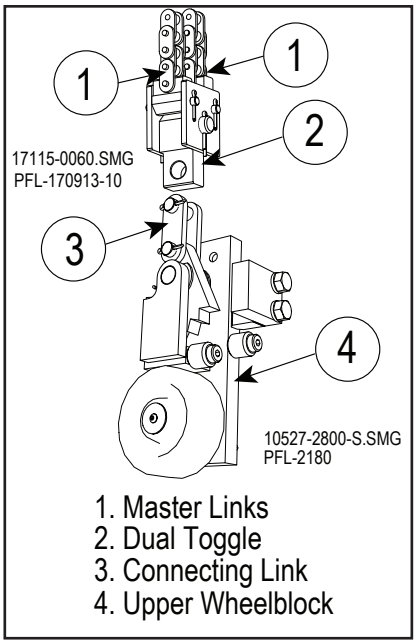

Attach the Upper Wheelblock to the VRC Chains Figure 12-35

Adjust the Length of the Lift Chains

1. Adjust the length of the lift chains in each column to be a half-link difference on the column and chain tube side. See Figure 12-36.
2. Attach the lift chains to the dual toggle with the lift chain master links. See Figure 12-35.
3. Remove the clamps on the lift chain.
4. Repeat the chain installation instructions steps 1-17 on both sprockets on the opposite column.
5. Make sure the lift chains attached to the wheelblock are taut.

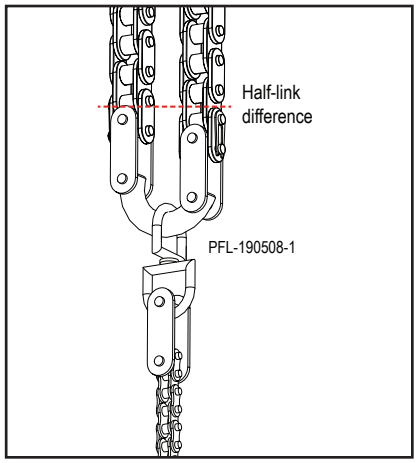

Half-Link Difference Figure 12-36

Level the Carriage

1. Remove the 3/16" shim on both sides of the column guide angle that was used to align the upper wheelblock.
2. Remove the blocks from under the carriage (if used) and remove the temporary anchors or welds holding the carriage secure. The carriage should now be hanging freely from the chains.
3. On one side of the VRC carriage, tighten the upper and lower wheelblock mounting bolts.
4. On the opposite side of the VRC carriage, loosen the upper and lower wheelblock mounting bolts.
5. Use a leveling tool to determine which direction the jackscrew needs to be turned to level the carriage. See Figure 12-37.
6. After leveling the carriage, tighten the upper and lower wheelblock mounting bolts.

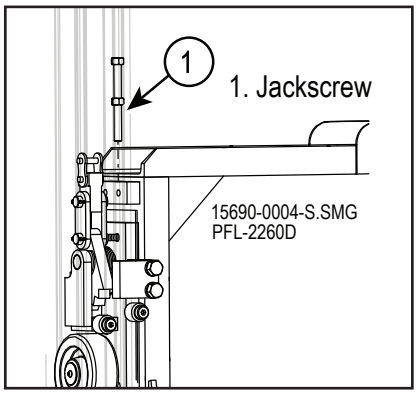

Leveling with Jackscrew Figure 12-37

PFLOW INDUSTRIES MATERIAL HANDLING SOLUTIONS
www.pflow.com
P 414 352 9000
F 414 352 9002
6720 N. Teutonia Ave.
Milwaukee, WI 53209

Install the Lift Chain Tensioner

1. Bolt or weld the chain bracket to the carriage upright c-channel. The placement may vary due to carriage construction. See Figure 12-38 and Figure 12-39.

NOTICE

The chain bracket should be attached to the carriage upright c-channel a minimum of 42" (1067mm) above the carriage deck and away from the chain tube. Make sure the chain and swivels do not rub on the chain tube, or any obstructions above it. See Figure 12-39.

2. Bolt the chain tensioner mounting bracket to the unistrut. See Figure 12-40.
3. Insert the chain tensioner assembly onto the chain tensioner mounting bracket near the bottom of the column. See Figure 12-40. Position the limit switch away from the carriage.
4. Open the turnbuckle to its fullest point.
5. Place the S-hook, swivel, and master link on the chain bracket. See Figure 12-39.

NOTE

The S-hook supplied with the machine is properly sized for safety purposes. ***Do not squeeze the S-hook shut.***

6. Place the tensioner chain (size #35 or #50) coming from the chain tube around the sprocket and cut to length to meet the master link. See Figure 12-40.
7. Attach the tensioner chain (size #35 or #50) to the swivel with the appropriate master link.
8. Repeat the lift chain tensioner installation with the other column.

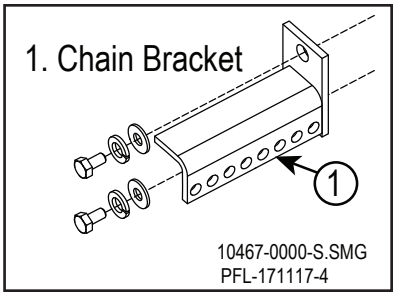

Chain Bracket Figure 12-38

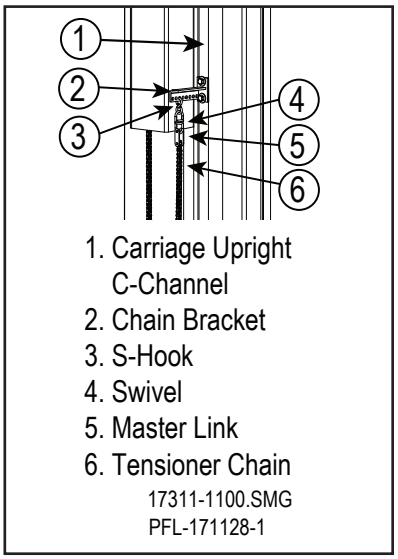

Tensioner Chain Assembly Figure 12-39

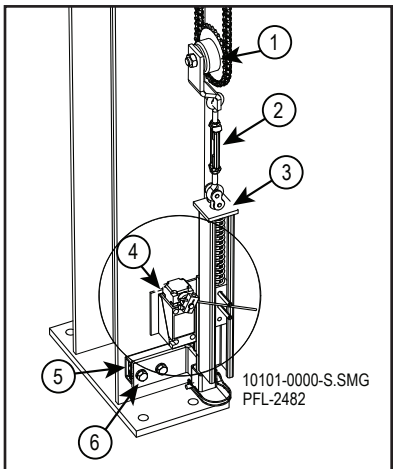

Chain Tensioner Assembly Figure 12-40

MATERIAL HANDLING SOLUTIONS
www.pflow.com
P 414 352 9000
F 414 352 9002
6720 N. Teutonia Ave.
Milwaukee, WI 53209

Adjust the Turnbuckle

1. While the carriage is hanging freely from the lift chains, adjust the turnbuckle until the gap from the top of the chain tensioner to the underside of the master link is 1-1/2" (38mm) wide. See Figure 12-41.
2. Tighten both jam nuts on the turnbuckle.

Position the Limit Switch Rod Arm

1. Adjust the limit switch rod arm to be centered between the two roll pins on the UHMW slide block. See Figure 12-41.
2. Make sure that when all tension on the chain is released that the roll pins will engage the limit switch rod and activate the switch.

NOTE *On VRCs over 20' (6096mm) tall, limit switch may activate intermittently. If this occurs, move the lower roll pin to the lower hole in the chain tensioner block. Readjust the limit switch rod arm to the center of the roll pins. See Figure 12-42.*

Review for Interference

Make sure the carriage is able to rise 6" (152mm) without interference. Verify that the carriage is level and the chains are equally tight.

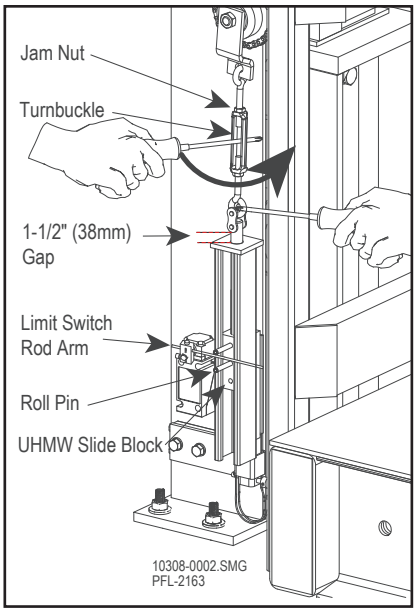

Turnbuckle Adjustment Figure 12-41

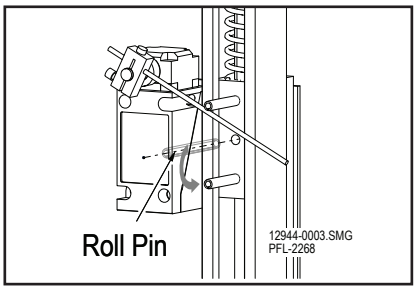

Limit Switch Adjustment Figure 12-42

PFLOW INDUSTRIES MATERIAL HANDLING SOLUTIONS
www.pflow.com
P 414 352 9000
F 414 352 9002
6720 N. Teutonia Ave.
Milwaukee, WI 53209

Install the Slack Chain Sensor

1. While the carriage is hanging freely from the lift chains, attach the slack chain sensor to the mounting pad at the top of each column. Tighten the serrated long bolts. See Figure 12-43.
2. Drill a 3/8" hole through the bracket into the mounting pad on the column. Install positioning roll pin. See Figure 12-43.
3. Loosen the 1/2-13 x 4-1/2" long clamp bolt and slide both of the plastic “shoes” forward until the “shoes” press against the dual chains. See Figure 12-45.
4. Tighten the 3/8-16 jackscrew [see Figure 12-45] to compress the shoes against the chain evenly. 1/2" (13mm) of the shaft for the shoes should be visible. See Figure 12-44.
5. Tighten the 1/2-13 x 4-1/2" long clamp bolt to clamp the sensors in place.

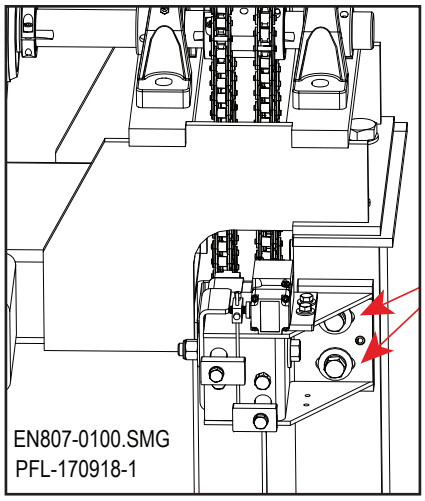

Attach the Slack Chain Sensor Figure 12-43

NOTE *The switch activates when either chain goes slack or breaks and will leave the VRC inoperable.*

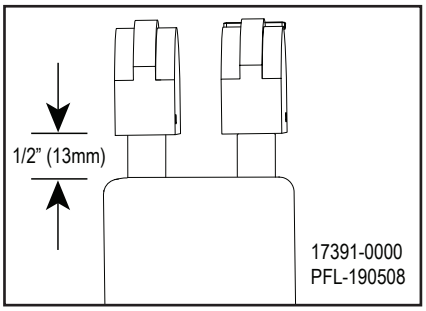

Adjust the Slack Chain Compression Figure 12-44

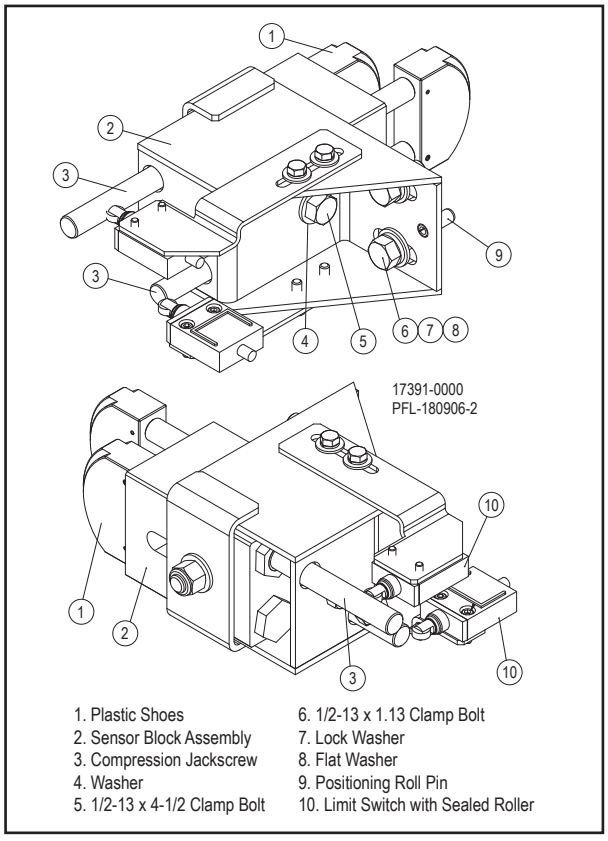

Slack Chain Sensor Figure 12-45

MATERIAL HANDLING SOLUTIONS
www.pflow.com
P 414 352 9000
F 414 352 9002
6720 N. Teutonia Ave.
Milwaukee, WI 53209

⚠WARNING

Carriage drop hazard! Before operating the VRC, replace the setscrew in the safety cam with the previously removed hex head screw and washer. Otherwise the safety cam will not function.

Final Steps - Inspect and Verify

Reinstall the Chain Jump Guides

Tighten Bolts

1. Make sure all wheelblock setscrews are removed and replaced with the previously removed hex head screw and washer.
2. Reinstall the chain jump guides. See Figure 12-47.
3. Adjust the chain jump guides to 1/4" (6mm) distance from the lift chain.
4. Torque the 1/2-13 drivebase mounting bolts to 49 lb-ft.
5. Torque the 5/8-11 wheelblock mounting bolts to 150 lb-ft.
6. Tighten all other bolts.

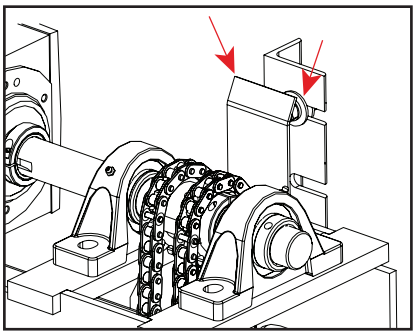

Reinstall the Chain Jump Guides
Figure 12-47

Complete Field Welding

All field welding must conform to the latest edition of AWS D1.1. The weld filler material is to be a minimum of E60xx.

- Fully weld all braces.
- Final weld spliced columns (if applicable).
- Weld the drivebase assembly to the columns.

MATERIAL HANDLING SOLUTIONS
www.pflow.com
P 414 352 9000
F 414 352 9002
6720 N. Teutonia Ave.
Milwaukee, WI 53209

MATERIAL HANDLING SOLUTIONS
www.pflow.com
P 414 352 9000
F 414 352 9002
6720 N. Teutonia Ave.
Milwaukee, WI 53209

Before You Begin

Read this entire manual. Verify the job site dimensions against the PFlow Industries, Inc. General Arrangement (GA) drawing before starting the installation. If the site conditions do not match the GA drawing, please consult the PFlow Industries, Inc. Product Support Department.

⚠DANGER

Falling column hazard! The installation of this equipment requires a qualified installer with extensive knowledge and experience on how to rig, erect, and support structural steel. Be sure to properly support the columns, posts, and panels during installation. The carriage and wheelblocks cannot prevent the columns from falling. Do not depend on the base plates or feet to prevent the columns, posts, and panels from falling.

NOTICE

ASME B20.1 defines a qualified person as a person who, by possession of a recognized degree or certificate of professional standing, or by extensive knowledge, training, and experience, has successfully demonstrated his/her ability to solve problems relating to the subject matter and work.

⚠CAUTION

Lifting hazard! Components and accessories may be heavy. Use the appropriate lifting apparatus or get help when moving or lifting.

Required Anchoring and Bracing Guidelines

Anchoring and bracing of the Vertical Reciprocating Conveyor (VRC) is ***required***. Illustrations in this section are to be used for reference only. Job site conditions may require a different alternative to those PFlow Industries, Inc. suggests in this document. A job specific bracing drawing may be provided. Verify drawing details prior to beginning any field bracing work. Before any final field welding is done, verify that the VRC columns and drivebase are aligned correctly.

All field welding must conform to the latest edition of AWS D1.1. The weld filler material is to be a minimum of E60xx.

- Fully weld horizontal floor braces.
- Fully weld support bracing at upper levels (unless shown otherwise).
- Fully weld all VRC connections and drive base mounting angles.

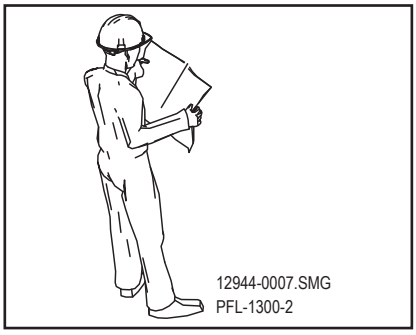

Review GA Drawing Figure 13-1

MATERIAL HANDLING SOLUTIONS
www.pflow.com
P 414 352 9000
F 414 352 9002
6720 N. Teutonia Ave.
Milwaukee, WI 53209

Side-to-Side and Front-to-Back Bracing

Side-to-side and front-to-back bracing of the Vertical Reciprocating Conveyor (VRC) is required. Bracing of the VRC and enclosures is the responsibility of the installer.

It is the customer's responsibility to make sure that the job site conditions have a structure with enough strength to be used for bracing in order to withstand the forces of weight and gravity.

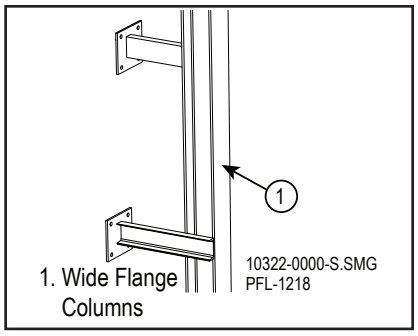

Bracing Columns Figure 13-2

NOTE *If PFlow Industries, Inc. prepared seismic bracing materials, the bracing requirements and the General Arrangement (GA) drawing are provided in the shipping packet.*

Bracing Supplies

Typically, for a two-level VRC, PFlow Industries, Inc. supplies:

- (2) 10' (3048mm) lengths of 4" (102mm) channel or
  (2) 10' (3048mm) lengths of wall tube
  2" x 4" x 1/4" (51mm x 102mm x 6mm)
- (2) 10' (3048mm) lengths of angle per supplied gate
  1-1/2" x 1-1/2" x 1/8" (38mm x 38mm x 3mm)
- (2) to (4) mounting plates

Each additional level is supplied with the following:

- (1) 10' (3048mm) length of channel or
  (1) 10' (3048mm) length of wall tube
  2" x 4" x 1/4" (51mm x 102mm x 6mm)
- (1) 10' (3048mm) length of angle per supplied gate
  1-1/2" x 1-1/2" x 1/8" (38mm x 38mm x 3mm)
- (2) mounting plates

NOTICE PFlow Industries, Inc. does not supply anchor bolts nor guarantee that the above material is sufficient for the application. It is the installer's responsibility to verify the information included in the shipping packet prior to commencing work.

PFLOW INDUSTRIES MATERIAL HANDLING SOLUTIONS
www.pflow.com
P 414 352 9000
F 414 352 9002
6720 N. Teutonia Ave.
Milwaukee, WI 53209

Anchoring Guidelines

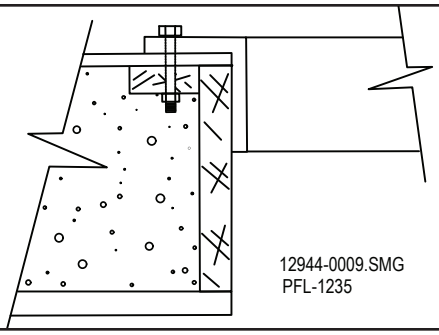

Using a tie plate Figure 13-3

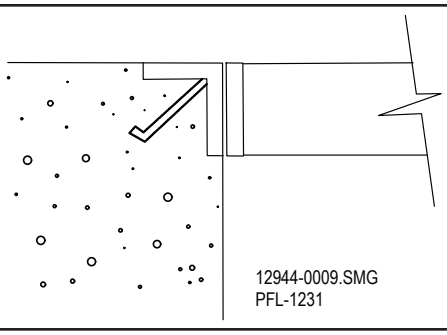

Welding to a curb angle Figure 13-4

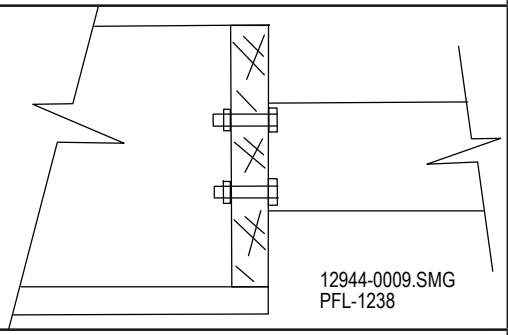

Anchoring to a wood floor - through bolting Figure 13-5

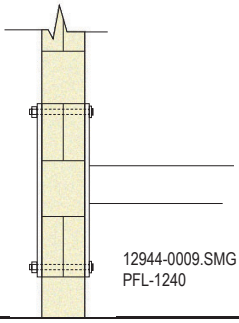

Anchoring to a CMU wall with backing plates Figure 13-6

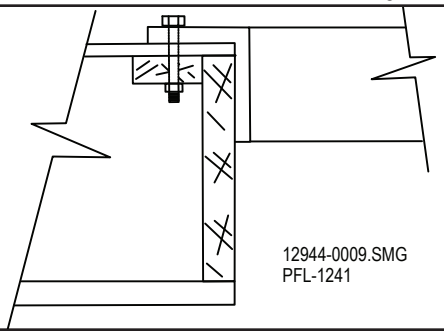

Anchoring to a wooden floor (preferred method) Figure 13-7

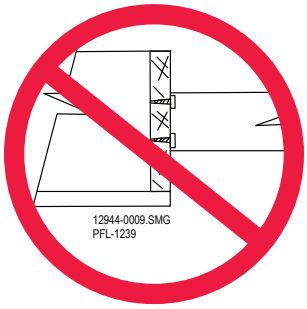

Anchoring to a wooden floor (not recommended) Figure 13-8

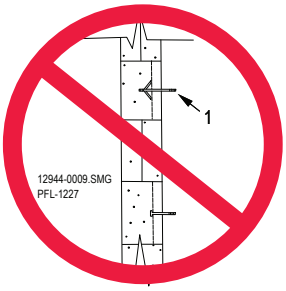

Anchoring to CMU wall (not recommended) Figure 13-9

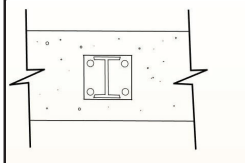

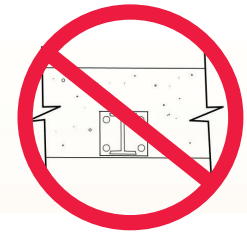

Anchoring mounting plate to solid floor Figure 13-10

MATERIAL HANDLING SOLUTIONS
www.pflow.com
P 414 352 9000
F 414 352 9002
6720 N. Teutonia Ave.
Milwaukee, WI 53209

Bracing Guidelines

The following guidelines illustrate acceptable methods of attaching bracing to a building.

DANGER

Falling column hazard! To avoid serious personal injury or death, do not lift the carriage or load the VRC until the VRC bracing is adequately sized and welded.

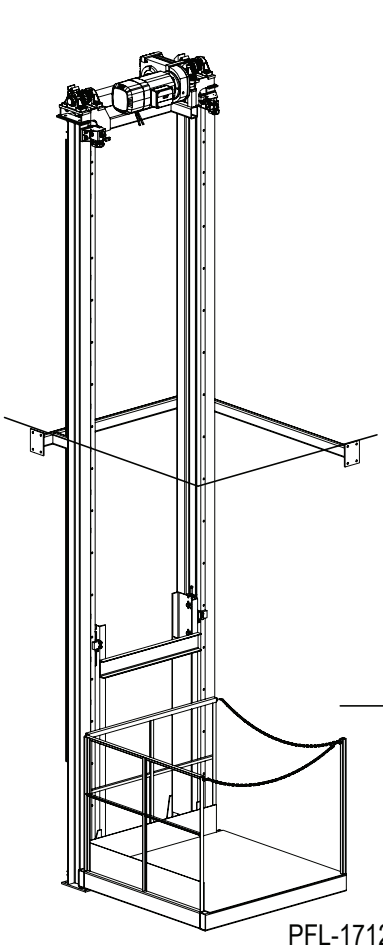

PFL-171212-1

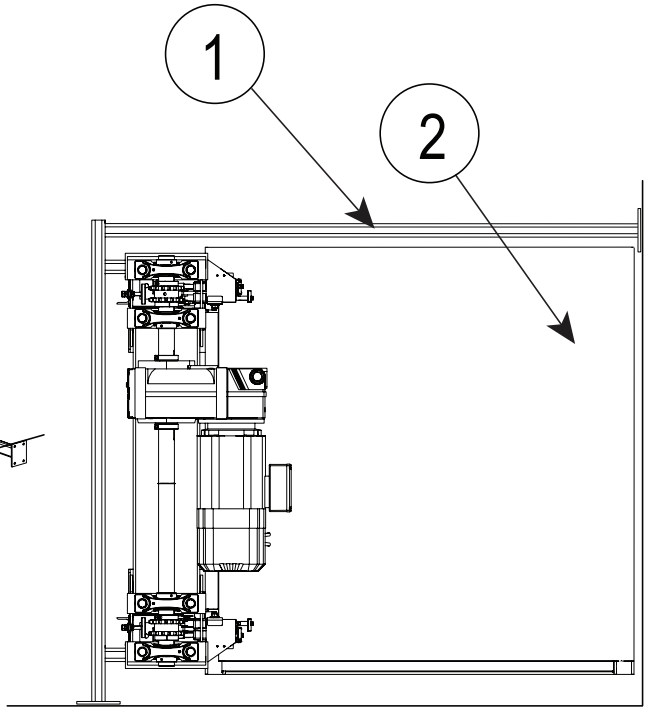

PFL-171212-2

1. Bracing
2. Carriage Deck

NOTE *Make sure bracing does not interfere with any portion of the carriage deck.*

In a Corner Figure 13-11

MATERIAL HANDLING SOLUTIONS
www.pflow.com
P 414 352 9000
F 414 352 9002
6720 N. Teutonia Ave.
Milwaukee, WI 53209

Bracing Guidelines

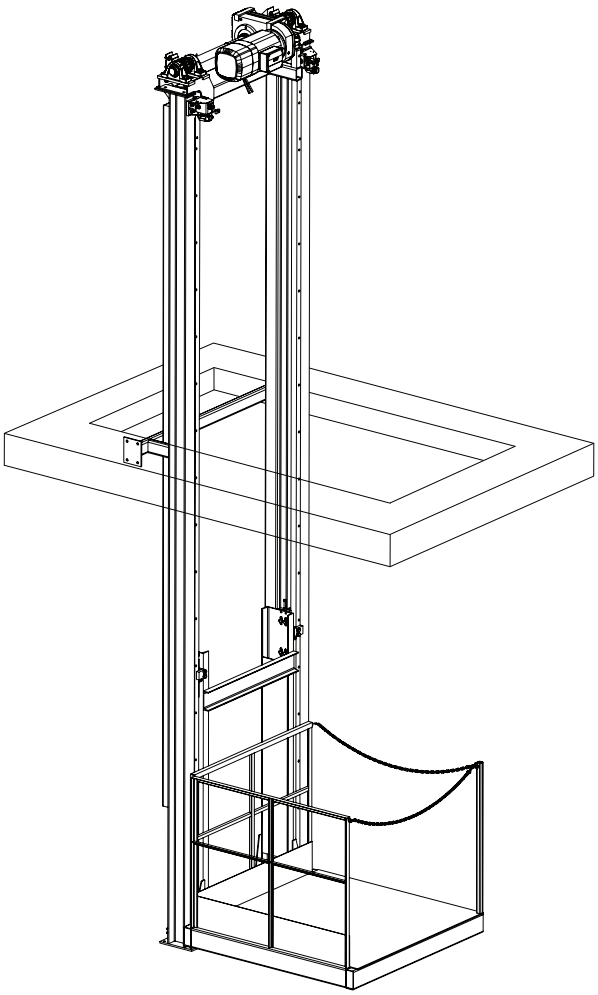

PFL-171212-3

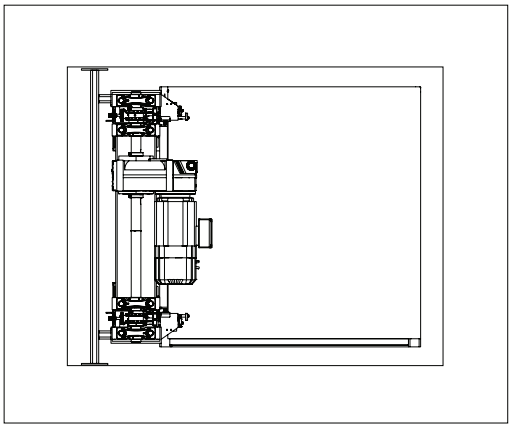

PFL-171212-4

Through a Floor Figure 13-12

MATERIAL HANDLING SOLUTIONS
www.pflow.com
P 414 352 9000
F 414 352 9002
6720 N. Teutonia Ave.
Milwaukee, WI 53209

Bracing Guidelines

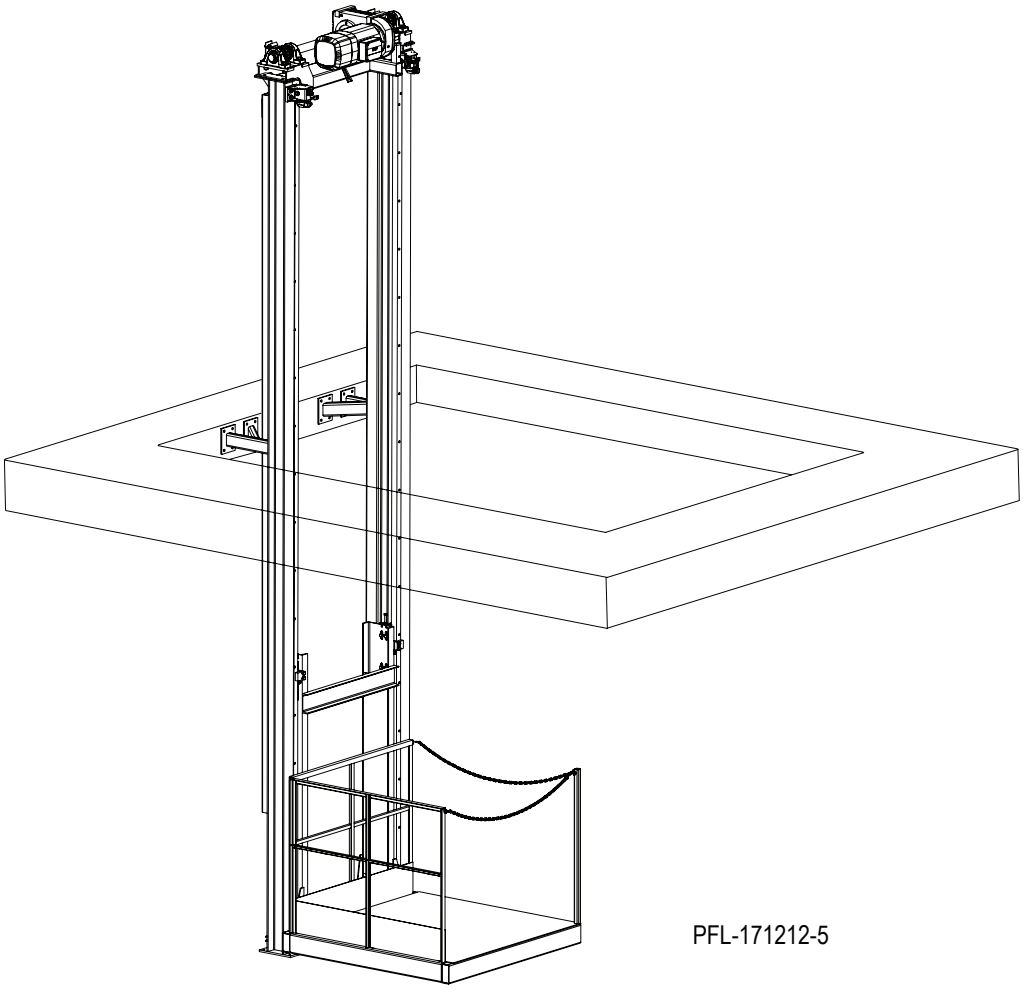

PFL-171212-5

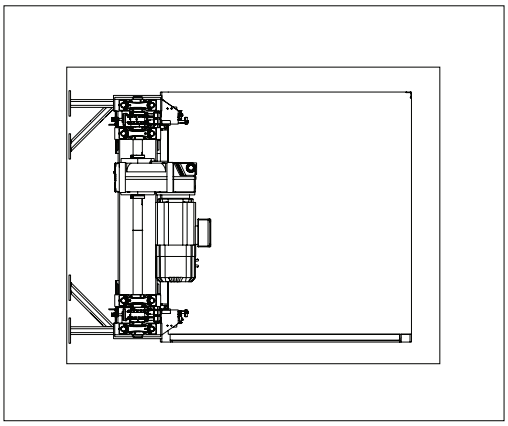

PFL-171212-6

Through a Floor Figure 13-13

MATERIAL HANDLING SOLUTIONS
www.pflow.com
P 414 352 9000
F 414 352 9002
6720 N. Teutonia Ave.
Milwaukee, WI 53209

Before You Begin

Read this entire manual. Verify the job site dimensions against the PFlow Industries, Inc. General Arrangement (GA) drawing before starting the installation. Height and placement of the limit switches and u-mount is included at the back of this installation manual. If the site conditions do not match the GA drawing or the limit switch and roller assembly mounting drawing is missing, please consult the PFlow Industries, Inc. Product Support Department.

Two-Level Limit Switches

The standard Vertical Reciprocating Conveyor (VRC) incorporates one (1) limit switch at each level to stop the carriage and one (1) overtravel limit switch. See Figure 14-1.

The following instructions and diagrams are the most commonly used method of mounting the limit switches. Due to varying site conditions, the instructions and diagrams may not apply to all applications.

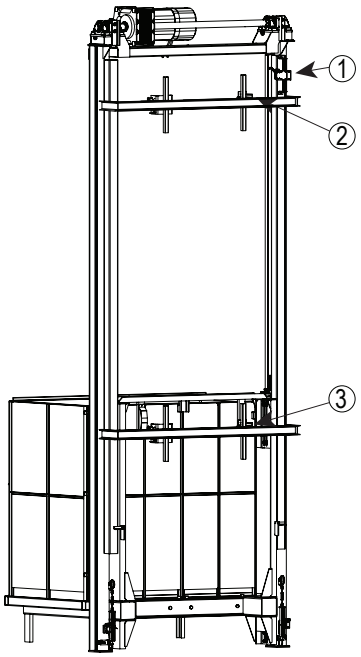

1. Overtravel Limit Switch
2. Second Floor Level Limit Switch
3. First Floor Level Limit Switch

PFL-180418-4

Limit Switch Locations Figure 14-1

Install the U-Mount

1. Position the carriage at the first level.
2. Position the lower level u-mount according to the limit switch and roller assembly mounting drawing.
3. Tack weld the u-mount to the column. See Figure 14-2. ***Do not finish weld at this time.***

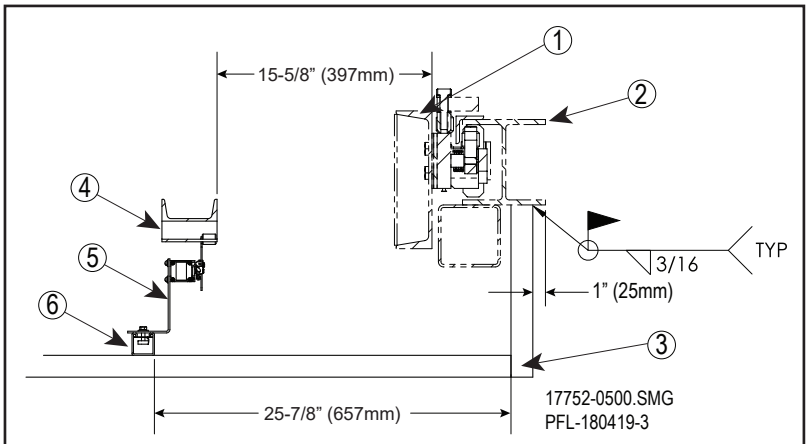

1. Carriage Upright
2. Column
3. U-Mount
4. Limit Switch Actuator
5. Limit Switch
6. Unistrut Channel

U-Mount and Limit Switch Actuator Placement Figure 14-2

MATERIAL HANDLING SOLUTIONS
www.pflow.com
P 414 352 9000
F 414 352 9002
6720 N. Teutonia Ave.
Milwaukee, WI 53209

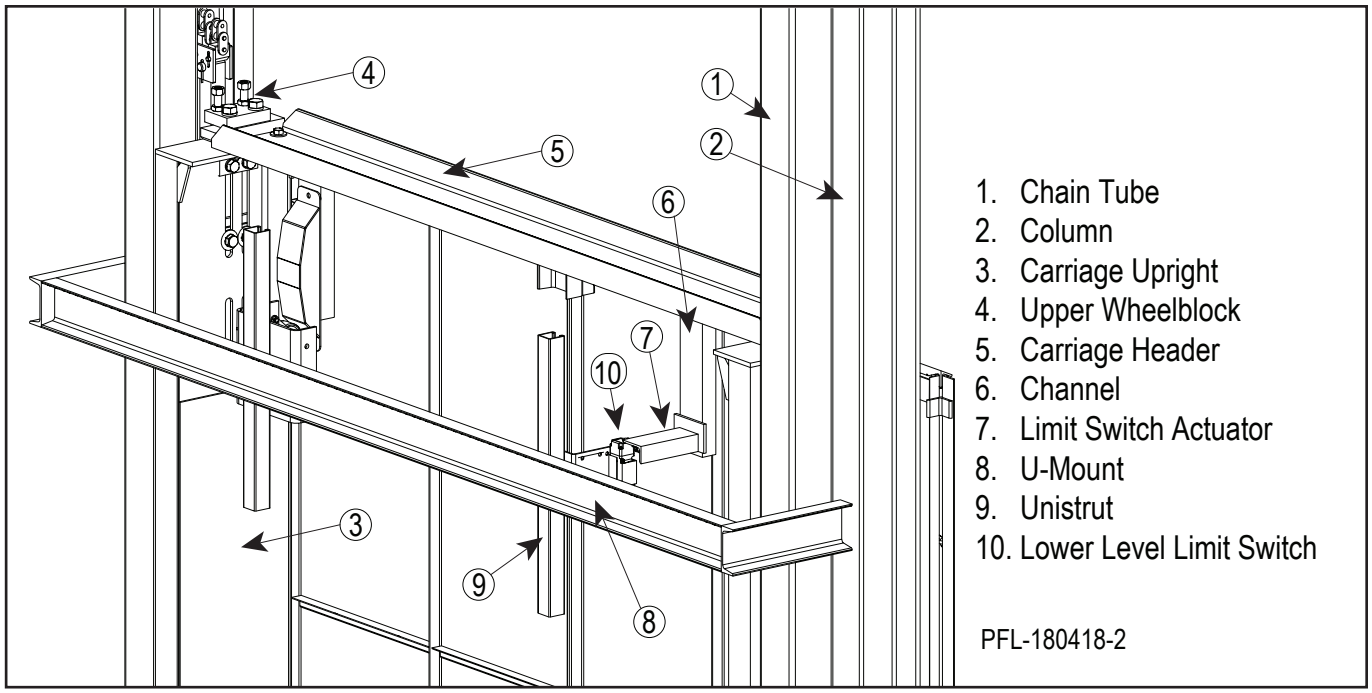

Lower Level Limit Switch Figure 14-3

Install the Lower Level Limit Switch

1. Position the channel to the underside of the carriage header and 15-5/8" (397mm) from the right outside edge of the carriage upright. See items 5 and 6 shown in Figure 14-3.
2. Tack weld the channel in place.
3. Tack weld the limit switch actuator to the channel. See item 7 shown in Figure 14-3.
4. Cut and tack weld a length of unistrut to the cross member of the u-mount 25-7/8" (657mm) from the right inside edge of the u-mount. See items 8 and 9 in Figure 14-3. ***Do not finish weld at this time.***
5. Attach the lower level limit switch to the unistrut.
6. Position the limit switch so that the limit switch roller arm contacts the bottom of the limit switch actuator while the limit switch roller arm is in the down position.
7. Tighten the positioning bolts on the limit switch assembly.

PFLOW INDUSTRIES MATERIAL HANDLING SOLUTIONS
www.pflow.com
P 414 352 9000
F 414 352 9002
6720 N. Teutonia Ave.
Milwaukee, WI 53209

Install the Upper Level U-mount

1. Position the upper level u-mount according to the limit switch and roller assembly mounting drawing.
2. Tack weld the u-mount to the column. See Figure 14-4. ***Do not finish weld at this time.***

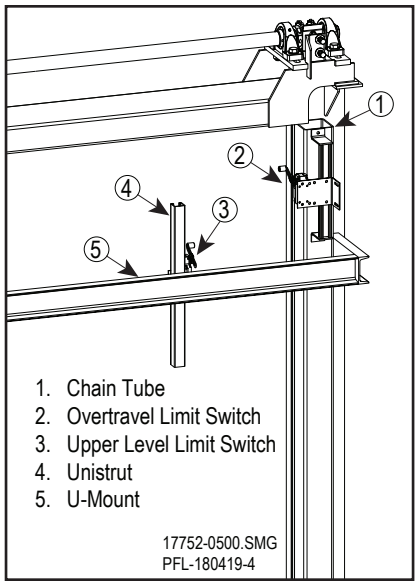

Upper Level Detail Figure 14-4

Install the Upper Level Limit Switch

1. Cut and tack weld a length of unistrut to the cross member of the u-mount 25-7/8" (657mm) from the right inside edge of the u-mount. See Figure 14-5. ***Do not finish weld at this time.***
2. Attach the upper level limit switch to the unistrut.
3. Position the limit switch so that the limit switch roller arm contacts the top of the limit switch actuator when the carriage is at the upper level. The limit switch roller arm should extend at a 90° angle.
4. Tighten the positioning bolts on the limit switch assembly.

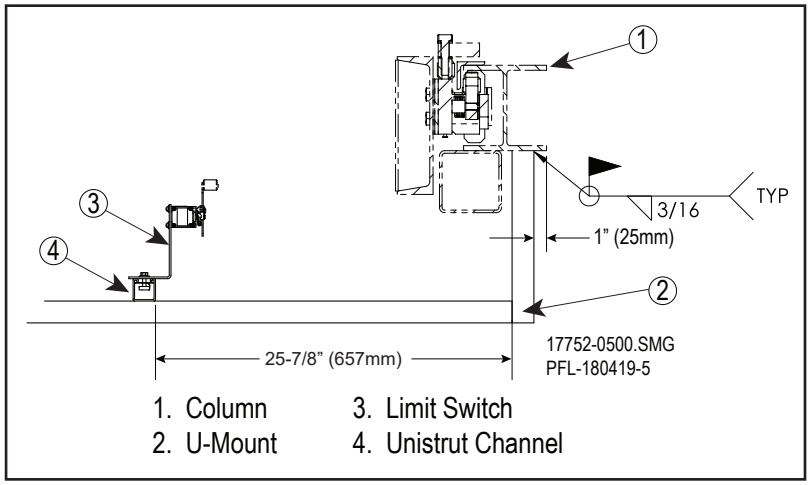

U-Mount and Unistrut Placement
Figure 14-5

MATERIAL HANDLING SOLUTIONS
www.pflow.com
P 414 352 9000
F 414 352 9002
6720 N. Teutonia Ave.
Milwaukee, WI 53209

Install the Overtravel Limit Switch

1. Center the unistrut assembly from left to right on the chain tube. See Figure 14-6.
2. Position the feet of the unistrut assembly flush with the top edge of the chain tube.

NOTICE

The chain tube is a chain guard, not a structural member. The chain tube is thin walled. Be careful to avoid burning through the chain tube when welding.

3. Tack weld the unistrut into place. ***Do not finish weld at this time.***
4. Place the L Bracket of the limit switch assembly in the unistrut slides. See Figure 14-6.
5. Position the limit switch roller arm to make contact with the top surface of the carriage header if the carriage travels 1" (25mm) beyond the uppermost floor level. The limit switch roller arm should extend at a 90° angle.
6. Tighten the positioning bolts on the overtravel limit switch assembly.

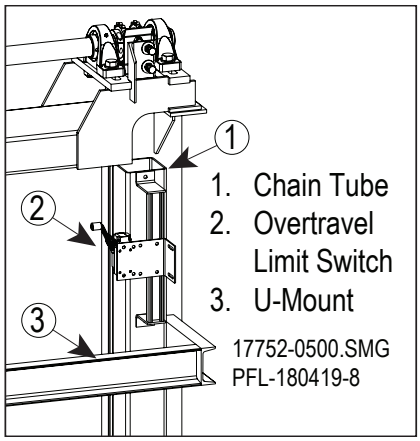

Overtravel Limit Switch Position
Figure 14-6

Finish Weld

Finish weld the actuator to the carriage, u-mount to the column, and all unistrut mounts to the face of the u-mount.

PFLOW INDUSTRIES MATERIAL HANDLING SOLUTIONS
www.pflow.com
P 414 352 9000
F 414 352 9002
6720 N. Teutonia Ave.
Milwaukee, WI 53209

Before You Begin

Read this entire manual. Verify the job site dimensions against the PFlow Industries, Inc. General Arrangement (GA) drawing before starting the installation. Height and placement of the limit switches and u-mount is included at the back of this installation manual. If the site conditions do not match the GA drawing or the limit switch and roller assembly mounting drawing is missing, please consult the PFlow Industries, Inc. Product Support Department.

Three-Level or More Limit Switches

The standard Vertical Reciprocating Conveyor (VRC) incorporates one (1) limit switch at the lower level, two (2) limit switches at each intermediate level, one (1) limit switch at the uppermost level, and one (1) overtravel limit switch to stop the carriage. See Figure 14-7.

The following instructions and diagrams are the most commonly used method of mounting the limit switches. Due to varying site conditions, the instructions and diagrams may not apply to all applications.

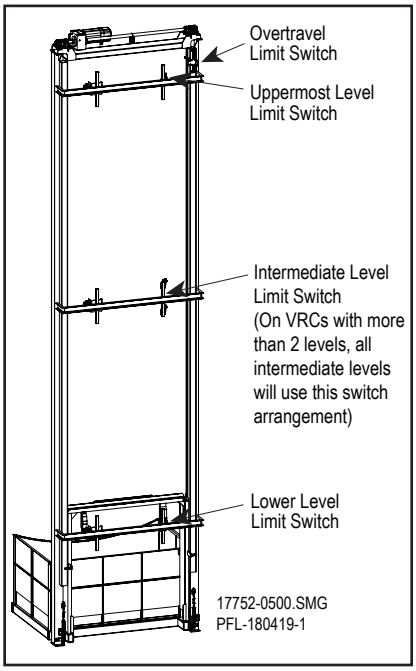

Limit Switch Locations Figure 14-7

Install the U-mount

1. Position the carriage at the desired first level.
2. Position the lower level u-mount according to the limit switch and roller assembly mounting drawing.
3. Tack weld the u-mount to the column. See Figure 14-8. ***Do not finish weld at this time.***

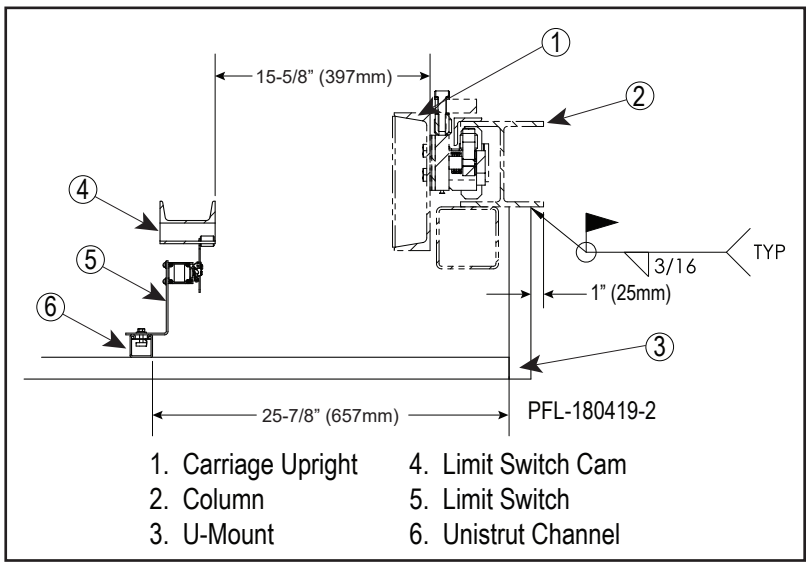

U-Mount and Limit Switch Cam Placement Figure 14-8

MATERIAL HANDLING SOLUTIONS
www.pflow.com
P 414 352 9000
F 414 352 9002
6720 N. Teutonia Ave.
Milwaukee, WI 53209

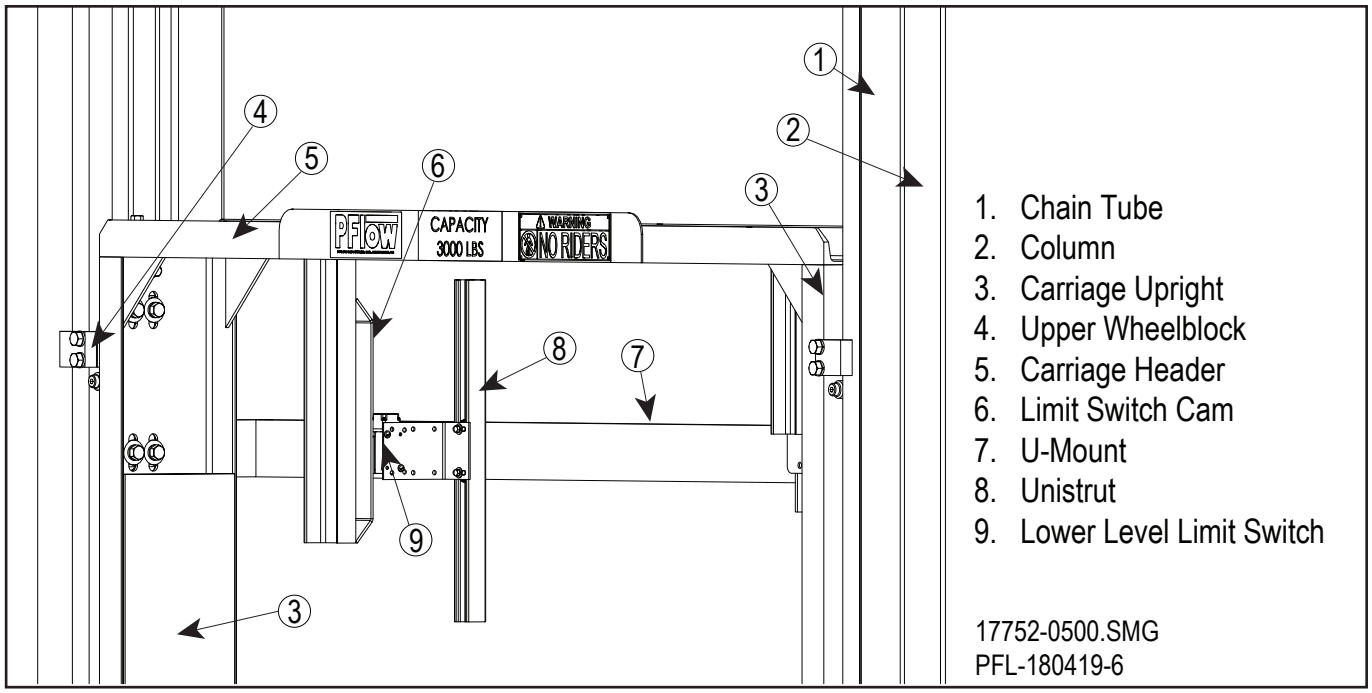

Lower Level Limit Switch Figure 14-7

Install the Lower Level Limit Switch

1. Position the limit switch cam on the underside of the carriage header and 15-5/8" (397mm) from the right outside edge of the carriage upright. See items 6 shown in Figure 14-7.
2. Tack weld the limit switch cam in place.
3. Cut and tack weld a length of unistrut to the cross member of the u-mount 25-7/8" (657mm) from the right inside edge of the u-mount. See items 7 and 8 in Figure 14-7. ***Do not finish weld at this time.***
4. Attach the lower level limit switch to the unistrut. See item 9 shown in Figure 14-7.
5. Position the limit switch so that the limit switch roller arm contacts the bottom of the limit switch cam. The limit switch roller arm should extend at a 90° angle.
6. Tighten the positioning bolts on the limit switch assembly.

PFLOW INDUSTRIES MATERIAL HANDLING SOLUTIONS
www.pflow.com
P 414 352 9000
F 414 352 9002
6720 N. Teutonia Ave.
Milwaukee, WI 53209

Install the Uppermost Level U-mount

1. Position the uppermost level u-mount according to the limit switch and roller assembly mounting drawing.
2. Tack weld the u-mount to the column. See Figure 14-4. ***Do not finish weld at this time.***

Install the Uppermost Level Limit Switch

1. Cut and tack weld a length of unistrut to the cross member of the u-mount 25-7/8" (657mm) from the right inside edge of the u-mount. See Figure 14-9. ***Do not finish weld at this time.***
2. Attach the uppermost level limit switch to the unistrut.
3. Position the limit switch so that the limit switch roller arm contacts the top of the limit switch cam. The limit switch roller arm should extend at a 90° angle.
4. Tighten the positioning bolts on the limit switch assembly.

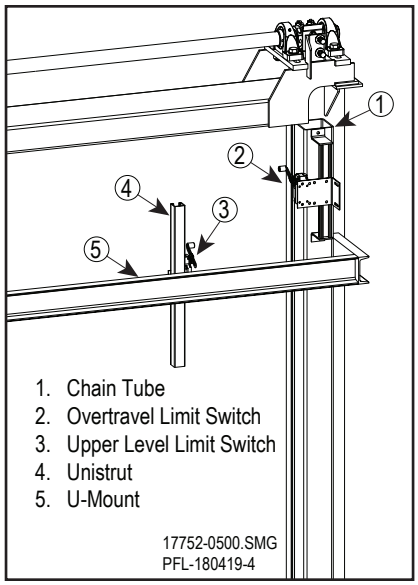

Uppermost Level Detail Figure 14-8

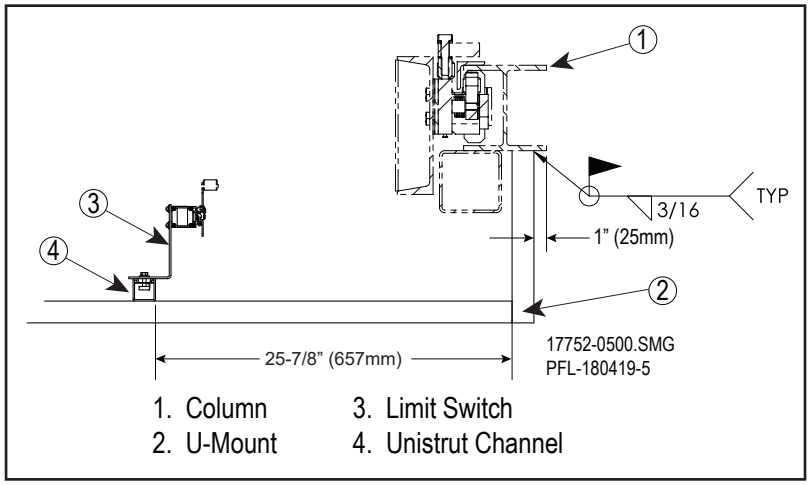

U-Mount and Unistrut Placement Figure 14-9

MATERIAL HANDLING SOLUTIONS
www.pflow.com
P 414 352 9000
F 414 352 9002
6720 N. Teutonia Ave.
Milwaukee, WI 53209

Install the Overtravel Limit Switch

1. Center the unistrut assembly from left to right on the chain tube. See Figure 14-6.
2. Position the feet of the unistrut assembly flush with the top edge of the chain tube.

NOTICE

The chain tube is a chain guard, not a structural member. The chain tube is thin walled. Be careful to avoid burning through the chain tube when welding.

3. Tack weld the unistrut into place. ***Do not finish weld at this time.***
4. Place the L Bracket of the limit switch assembly in the unistrut slides. See Figure 14-10.
5. Position the limit switch roller arm to make contact with the top surface of the carriage header if the carriage travels 1" (25mm) beyond the uppermost floor level. The limit switch roller arm should extend at a 90° angle.
6. Tighten the positioning bolts on the overtravel limit switch assembly.

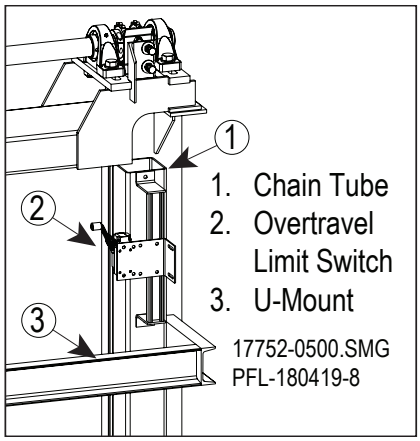

Overtravel Limit Switch Position
Figure 14-10

PFLOW INDUSTRIES MATERIAL HANDLING SOLUTIONS
www.pflow.com
P 414 352 9000
F 414 352 9002
6720 N. Teutonia Ave.
Milwaukee, WI 53209

Before You Begin

Read this entire manual.

Before starting the installation, verify the job site dimensions and the dimensions of the delivered materials against the PFlow Industries, Inc. General Arrangement (GA) drawing. Review and verify the enclosure positions and attachment fit-up to the gate post enclosure angle. If the site conditions do not match the GA drawing, please consult the PFlow Industries, Inc. Product Support Department.

⚠ DANGER

Falling gate hazard! The installation of this equipment requires a qualified installer with extensive knowledge and experience on how to rig and erect structural steel. Make sure to properly support, tie off, or temporarily brace the gate posts, gate panels, and gate assembly during installation. Do not depend on the gate post feet to support the gate posts while the gate is being positioned or assembled. Final bracing of the gate assembly must be to the Vertical Reciprocating Conveyor (VRC) or building structure. The use of structural angle is recommended.

Falling Hazard! The gate panel safety latch may not be operational while the gate is being installed. If you must leave a gate or gate panel unattended, put up barriers and signs warning personnel to stay clear.

⚠ CAUTION

Lifting hazard! Components and accessories are heavy.
To prevent serious personal injury, use the appropriate lifting apparatus, tie offs, or help when moving, lifting or assembling the components or accessories.

NOTICE

ASME B20.1-2015 defines a qualified person as a person who, by possession of a recognized degree or certificate of professional standing, or by extensive knowledge, training, and experience, has successfully demonstrated his/her ability to solve problems relating to the subject matter and work.

Identify Components

Gate components, posts, panels, and header assembly have color coded tags. Each gate tag is a different color.

Level	Tag Color
1st (bottom)	Green
2nd	Yellow
3rd	Red
4th	Blue
Other	Cream

The preferred method of installing a gate is to pre-assemble the full gate assembly on the floor, secure the pieces, and then stand it up. If for some reason pre-assembly is not possible, use these instructions as a general guide for the assembling, positioning, and securing of the gates.

PFLOW INDUSTRIES MATERIAL HANDLING SOLUTIONS
www.pflow.com
P 414 352 9000
F 414 352 9002
6720 N. Teutonia Ave.
Milwaukee, WI 53209

Assemble the Sliding Gate

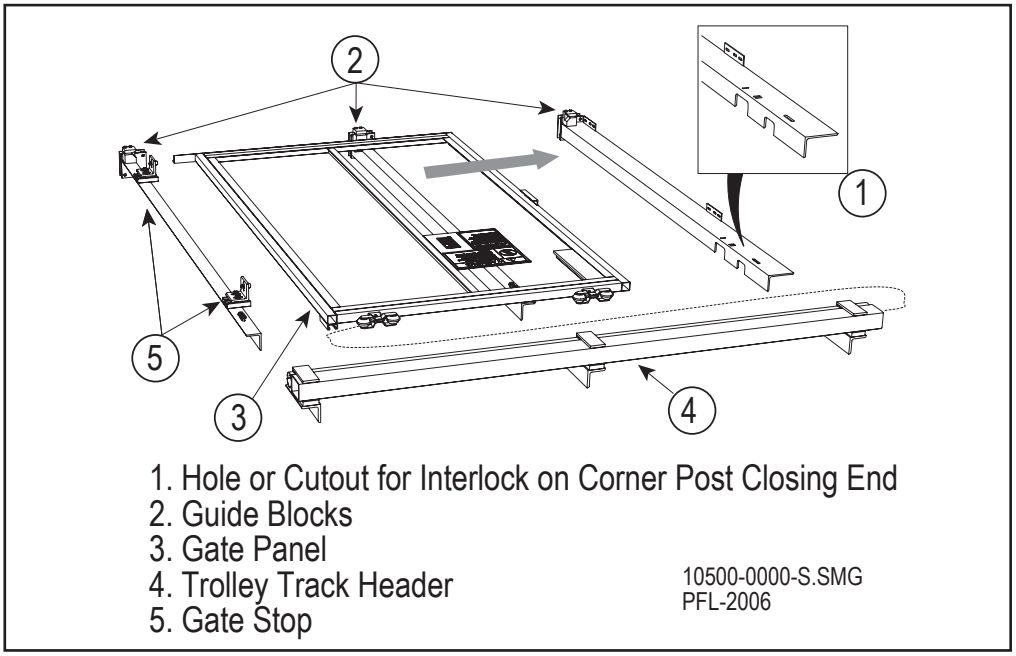

Sliding Gate Layout Figure 16-1

1. Lay the three (3) gate posts on the floor parallel to each other.
2. Position the gate post with the hole or cutout for the interlock on the closing end.
3. Position the post with two (2) guide block mounting holes near the base plate in the center. See Figure 16-1.
4. Position the third post (with gate stops) on the opening end.
5. Bolt the trolley track header to the gate posts.
6. Place the gate panel face down towards the ground and slide the gate panel into the trolley track header.
7. Bolt the guide block to the middle post. See Figure 16-2.
8. Slide the gate to its closed position.
9. Add the remaining guide blocks.

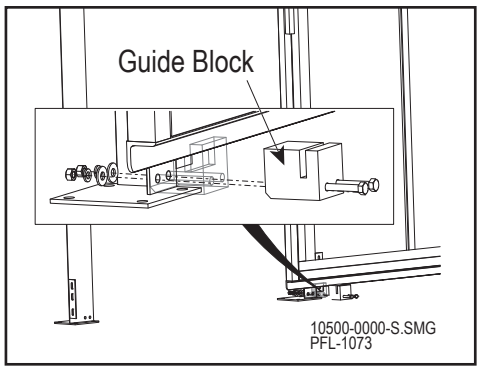

Bolt Guide Block Figure 16-2

MATERIAL HANDLING SOLUTIONS
www.pflow.com
P 414 352 9000
F 414 352 9002
6720 N. Teutonia Ave.
Milwaukee, WI 53209

Assemble the Sliding Gate (continued)

10. Locate and mark the center of the gate panel on the gate panel with a pencil. See Figure 16-3.
11. Measure the outside edge to the outside edge of the carriage and mark the center line with a pencil. See Figure 16-4.
12. Position a carpenter square on the edge of the carriage to extend the center line onto the floor 10" (254mm) away from the carriage. See Figure 16-4.
13. Mark a chalk line on the floor to ensure the center of the gate is on the center line of the carriage. See Figure 16-4.

NOTE *The ideal position of the gate panel is a maximum of 6" (152mm) from the inside of the gate panel to the front edge of the carriage. Local codes may have specific requirements concerning this distance.*

14. When the measurement from the gate panel to the carriage has been determined, snap a chalk line to identify the position of the gate panel parallel to the carriage. See Figure 16-5.

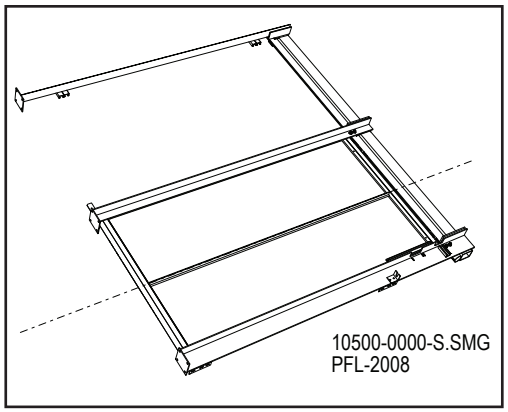

Mark Center Line of Sliding Gate Layout Figure 16-3

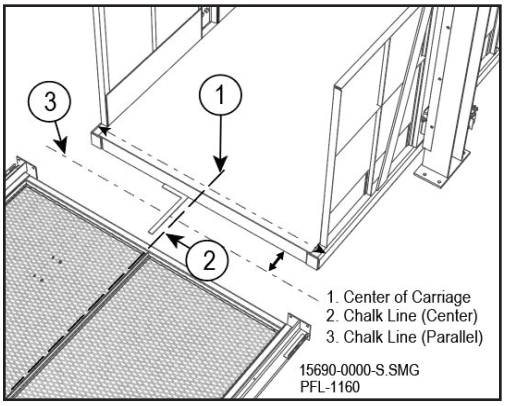

Establish Center Line Figure 16-4

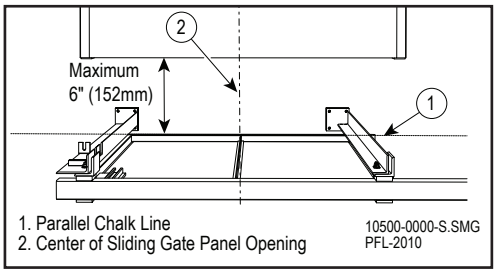

Alignment Figure 16-5

Install the Gate Post Extensions

Gate post extensions (if supplied) are to be bolted to the bottom of the gate posts before the gate post is raised. Refer to Section 20 for instructions.

PFLOW INDUSTRIES MATERIAL HANDLING SOLUTIONS
www.pflow.com
P 414 352 9000
F 414 352 9002
6720 N. Teutonia Ave.
Milwaukee, WI 53209

DANGER

Falling gate hazard! Be sure to properly support, tie off, or temporarily brace the gate posts, gate panels, and gate assembly during installation. Do not depend on the gate post feet to support the gate posts while the gate is being positioned or assembled. Final bracing of the gate assembly must be to the Vertical Reciprocating Conveyor (VRC) or building structure. The use of structural angle is recommended.

Raise and Secure the Sliding Gate

1. Raise and secure the gate assembly. The track and gate are to be facing away from the carriage.
2. Align the center of the closed gate to the center of the carriage. See Figure 16-6.
3. Align the inside of the gate panel on the parallel chalk line. See Figure 16-5.

Anchor the Gate Post Base Plates

4. Drill and anchor the gate post base plates to the floor with 3/8" anchors, 3-1/2" (89mm) long.

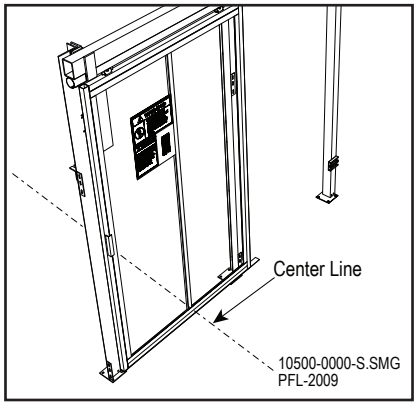

Align the Raised Gate Assembly Figure 16-6

DANGER

Falling gate hazard! The anchor hole depth should always be deeper than the length of the anchor bolt. The recommended wedge anchor size is 3/8" diameter by 3-1/2" (89mm) long.

Plumb and Square the Gate

1. Plumb and square the gate posts using a plumb bob or a level that is 4' (1219mm) or longer. See Figure 16-7.
2. Measure from the gate post to the Vertical Reciprocating Conveyor (VRC) column.

Install Support Braces

3. Cut two (2) 1-1/2" x 1-1/2" (38mm x 38mm) steel angle support braces and weld to each gate post and to the VRC columns or wall. See Figure 16-8.
4. Tighten all bolts.

Verify Gate Operation

5. Verify that the gate slides easily from side to side.
6. Confirm that the gate is plumb and square.
7. Weld the trolley track header to the gate posts.
8. Make sure the gate opens and closes properly. Adjust the gate panel as necessary. Additional bracing may be necessary.

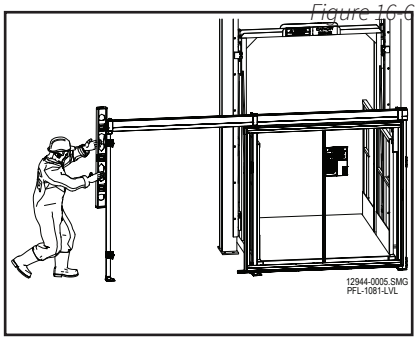

Plumb the Gate Figure 16-7

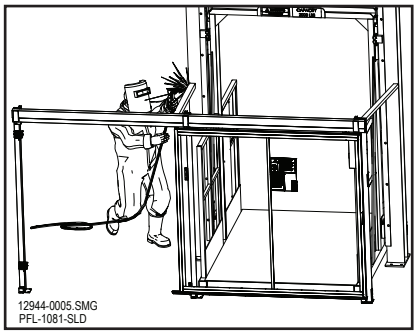

Weld Support Braces Figure 16-8

MATERIAL HANDLING SOLUTIONS
www.pflow.com
P 414 352 9000
F 414 352 9002
6720 N. Teutonia Ave.
Milwaukee, WI 53209

Install the Gate Interlock

Install the gate panel interlock and interlock keeper assembly. See Figure 16-9. Refer to the interlock installation section in the installation manual.

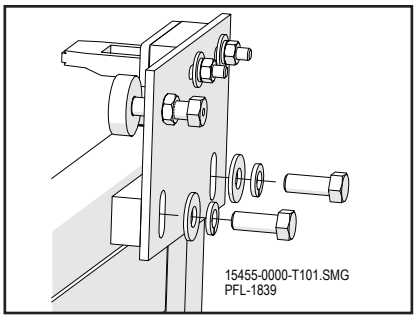

Install Interlock Keeper Assembly
Figure 16-9

Verify the Gate Interlock Operation

1. Verify that the gate panel slides smoothly.
2. Verify that the gate door opens when the carriage is present and does not open when the carriage is not present.
3. Verify that the gate panel remains locked when the carriage leaves the floor level.

Adjust the Interlock Keeper Assembly Magnet

1. With the VRC carriage on the same level as the gate, make sure that the interlock keeper assembly magnet holds the panel closed until the operator pulls open the panel. The magnet will require field adjustment to fine tune the panel “held closed” feature.
2. Adjust the panel position by backing off the magnet locking nut. See Figure 16-10.
3. Rotate the magnet hex head bolt to position the panel.
4. Secure the magnet position by tightening the magnet locking nut.

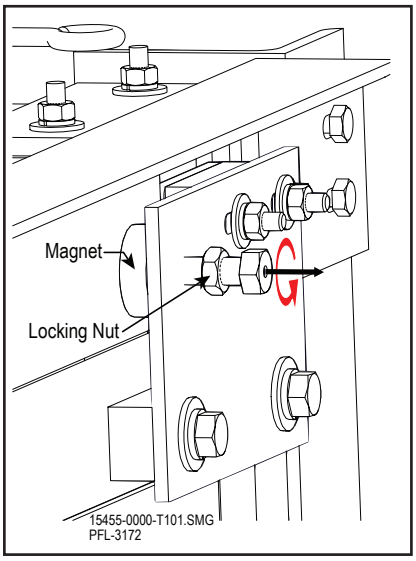

Adjust Panel Position Figure 16-10

PFLOW INDUSTRIES MATERIAL HANDLING SOLUTIONS
www.pflow.com
P 414 352 9000
F 414 352 9002
6720 N. Teutonia Ave.
Milwaukee, WI 53209

Assemble the Bi-Parting Swing Gate

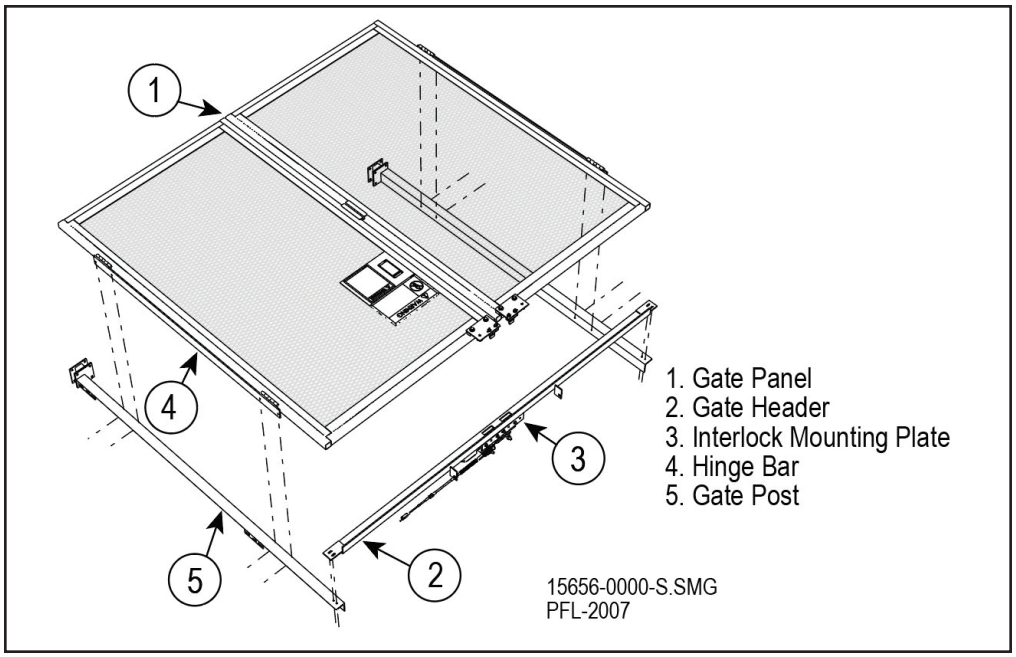

Bi-Parting Swing Gate Layout Figure 16-11

1. Lay the two (2) gate posts on the floor parallel to each other. See Figure 16-11.
2. Place the gate header at the top of the gate posts and bolt the gate header to each gate post. See Figure 16-12 for correct orientation.
3. Place the gate panels face up and position between the parallel gate posts and align with the hinge bars.
4. Bolt each hinge bar to its respective gate post. See Figure 16-12.

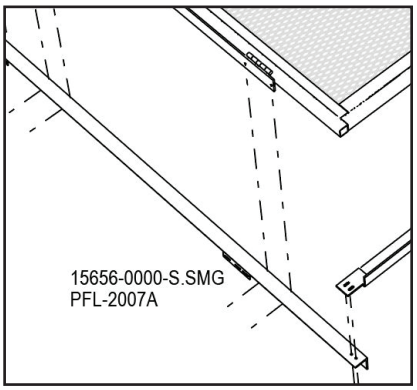

Bi-Parting Swing Gate Layout Figure 16-12

MATERIAL HANDLING SOLUTIONS
www.pflow.com
P 414 352 9000
F 414 352 9002
6720 N. Teutonia Ave.
Milwaukee, WI 53209

Assemble the Bi-Parting Swing Gate (continued)

5. Locate and mark the center of the gate assembly on the gate assembly with a pencil (where the gate panels meet in the center.) See Figure 16-13.
6. Measure the outside edge to the outside edge of the carriage to locate the center line. Mark the center line with a pencil on the top of the carriage deck. See Figure 16-13.
7. Position a carpenter square on the edge of the carriage to extend the center line onto the floor 10" (254mm) away from the carriage. See Figure 16-13.
8. Mark a chalk line on the floor to ensure the center of the gate assembly is on the center line of the carriage. See Figure 16-13.

NOTE *The ideal position of the gate panel is a maximum of 6" (152mm) from the inside of the gate panel to the front edge of the carriage. Local codes may have specific requirements concerning this distance.*

9. When the measurement from the gate panel to the carriage has been determined, snap a chalk line to identify the position of the gate panel parallel to the carriage. See Figure 16-13.

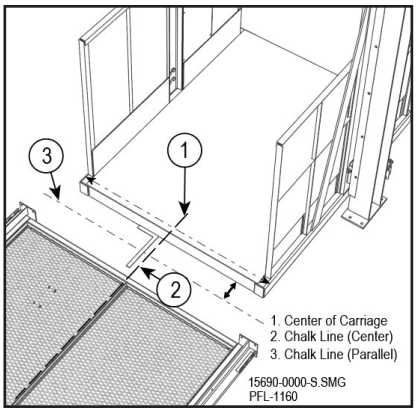

Establish Center and Parallel Line
Figure 16-13

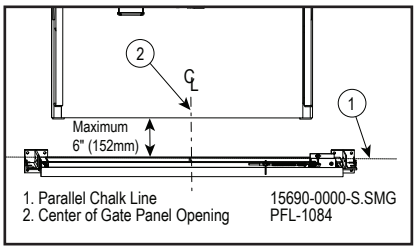

Alignment Figure 16-14

Install the Gate Post Extensions

Gate post extensions (if supplied) are to be bolted to the bottom of the gate posts before the gate post is raised. Refer to Section 20 for instructions.

PFLOW INDUSTRIES MATERIAL HANDLING SOLUTIONS
www.pflow.com
P 414 352 9000
F 414 352 9002
6720 N. Teutonia Ave.
Milwaukee, WI 53209

DANGER

Falling gate hazard! Be sure to properly support, tie off, or temporarily brace the gate posts, gate panels, and gate assembly during installation. Do not depend on the gate post feet to support the gate posts while the gate is being positioned or assembled. Final bracing of the gate assembly must be to the Vertical Reciprocating Conveyor (VRC) or building structure. The use of structural angle is recommended.

Raise and Secure the Gate Assembly

1. Raise and secure the gate assembly.
2. Align the center of the closed gate to the center of the carriage. See Figure 16-14 on the previous page.
3. Align the backside of the gate panels on the parallel chalk line. See Figure 16-14 on the previous page.

Anchor the Gate Post Base Plates

4. Drill and anchor the gate post base plates to the floor with 3/8" anchors, 3-1/2" (89mm) long.

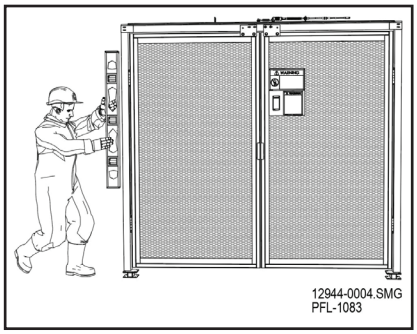

Plumb the Gate Figure 16-15

DANGER

Falling gate hazard! The anchor hole depth should always be deeper than the length of the anchor bolt. The recommended wedge anchor size is 3/8" diameter by 3-1/2" (89mm) long.

Plumb and Square the Gate

1. Plumb and square the gate posts using a plumb bob or a level that is 4' (1219mm) or longer. See Figure 16-15.
2. Measure from the gate post to the Vertical Reciprocating Conveyor (VRC) column.

Install Support Braces

3. Cut two (2) 1-1/2" x 1-1/2" (38mm x 38mm) steel angle support braces and weld to each gate post and to the VRC columns or wall. See Figure 16-16.
4. Tighten all bolts.

Verify the Gate Panel Swing

5. Verify the gate panel swing for proper site operational clearance.
6. Confirm that the gate is plumb and square.
7. Weld the gate header to the gate posts. See Figure 16-17.

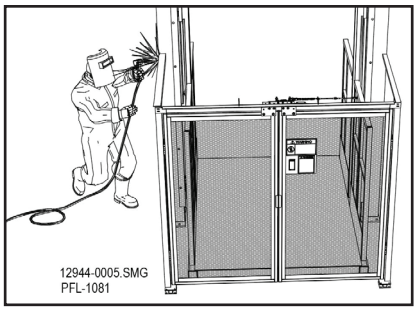

Weld Support Braces Figure 16-16

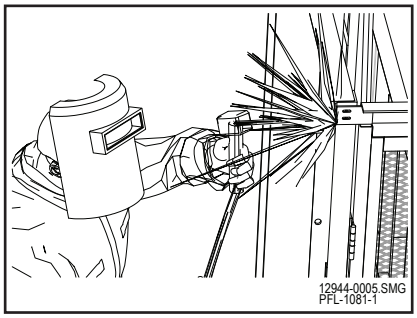

Weld Gate Header to Gate Posts Figure 16-17

MATERIAL HANDLING SOLUTIONS
www.pflow.com
P 414 352 9000
F 414 352 9002
6720 N. Teutonia Ave.
Milwaukee, WI 53209

Install the Gate Interlock

Install the gate panel interlock and interlock keeper assembly. See Figure 16-18. Refer to the interlock installation section in the installation manual.

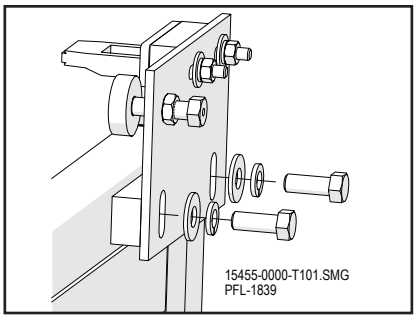

Install Interlock Keeper Assembly
Figure 16-18

Verify the Gate Interlock Operation

1. Verify that the gate panel swings smoothly.
2. Verify that the gate door opens when the carriage is present and does not open when the carriage is not present.
3. Verify that the gate panel remains locked when the carriage leaves the floor level.

Adjust the Interlock Keeper Assembly Magnet

1. With the VRC carriage on the same level as the gate, make sure that the interlock keeper assembly magnet holds the panel closed until the operator pulls open the panel. The magnet will require field adjustment to fine tune the panel “held closed” feature.
2. Adjust the panel position by backing off the magnet locking nut. See Figure 16-19.
3. Rotate the magnet hex head bolt to position the panel.
4. Secure the magnet position by tightening the magnet locking nut.

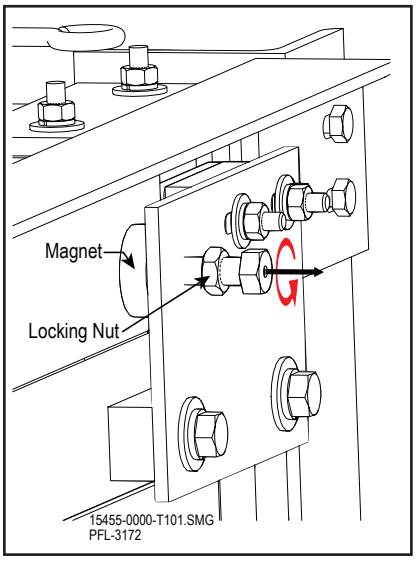

Adjust Panel Position Figure 16-19

PFLOW INDUSTRIES MATERIAL HANDLING SOLUTIONS
www.pflow.com
P 414 352 9000
F 414 352 9002
6720 N. Teutonia Ave.
Milwaukee, WI 53209

Assemble the Swing Gate

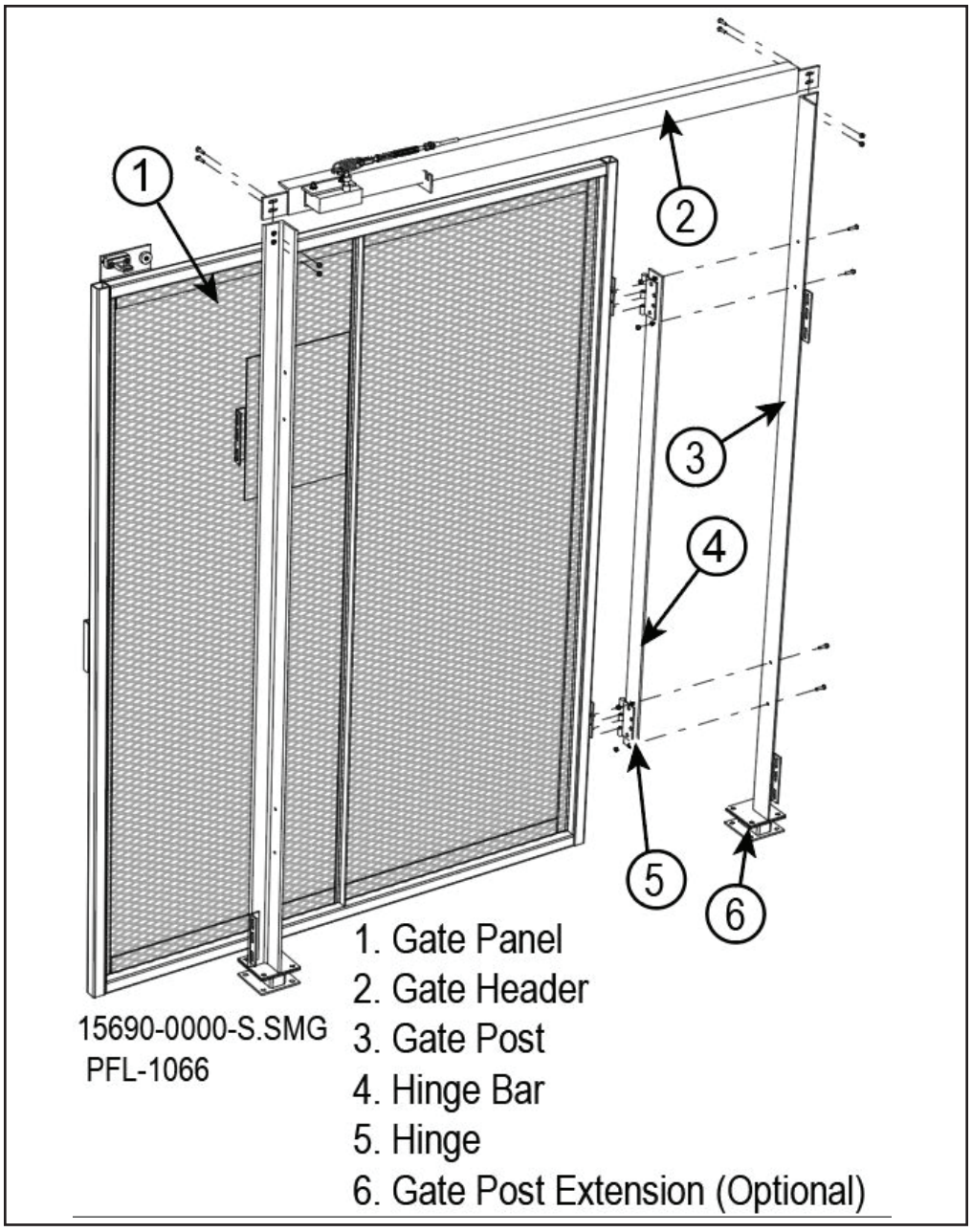

Swing Gate Layout Figure 16-20

1. Lay the gate posts on the floor parallel to each other. See Figure 16-20.
2. Place the gate header at the top of the gate posts and bolt in position with the hardware provided. See Figure 16-21.
3. Position the back side of the gate panel between the parallel gate posts and align with the hinge bars.

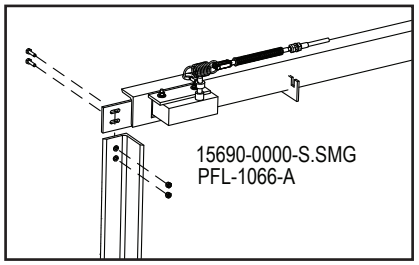

Place Gate Header Figure 16-21

PFLOW INDUSTRIES MATERIAL HANDLING SOLUTIONS
www.pflow.com
P 414 352 9000
F 414 352 9002
6720 N. Teutonia Ave.
Milwaukee, WI 53209

Assemble the Swing Gate (continued)

4. Bolt the gate post to the gate panel hinge bar. See Figure 16-22.
5. Locate and mark the center of the gate panel on the gate panel with a pencil. See Figure 16-23.
6. Measure the outside edge to the outside edge of the carriage to locate the center line. Mark the center line with a pencil on the top of the carriage deck. See Figure 16-23.
7. Position a carpenter square on the edge of the carriage to extend the center line onto the floor 10" (254mm) away from the carriage. See Figure 16-23.
8. Mark a chalk line on the floor to ensure the center of the panel is on the center line of the carriage. See Figure 16-23.

NOTE *The ideal position of the gate panel is a maximum of 6" (152mm) from the inside of the gate panel to the front edge of the carriage. Local codes may have specific requirements concerning this distance.*

9. When the measurement from the back side of the gate panel to the carriage has been determined, snap a chalk line to identify the position of the gate panel parallel to the carriage. See Figure 16-23.

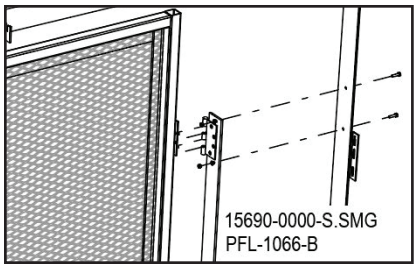

Bolt Gate Post to Hinge Panel Figure 16-22

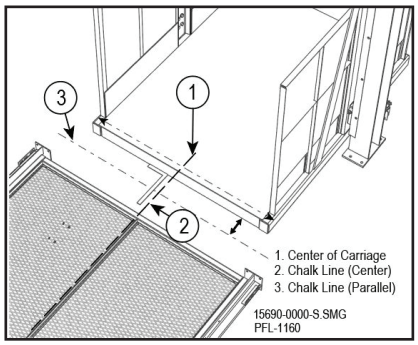

Establish Center and Parallel Line Figure 16-23

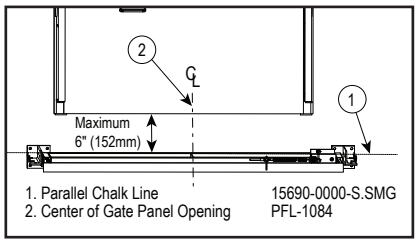

Alignment Figure 16-24

Install the Gate Post Extensions

Gate post extensions (if supplied) are to be bolted to the bottom of the gate posts before the gate post is raised. Refer to Section 20 for instructions.

PFLOW INDUSTRIES MATERIAL HANDLING SOLUTIONS
www.pflow.com
P 414 352 9000
F 414 352 9002
6720 N. Teutonia Ave.
Milwaukee, WI 53209

DANGER

Falling gate hazard! Be sure to properly support, tie off, or temporarily brace the gate posts, gate panels, and gate assembly during installation. Do not depend on the gate post feet to support the gate posts while the gate is being positioned or assembled. Final bracing of the gate assembly must be to the Vertical Reciprocating Conveyor (VRC) or building structure. The use of structural angle is recommended.

Raise and Secure the Swing Gate Assembly

1. Raise and secure the gate assembly.
2. Align the center of the gate to the center of the carriage. See Figure 16-24.
3. Align the back side of the gate panel on the parallel chalk line. See Figure 16-24.

Anchor the Gate Post Base Plates

4. Drill and anchor the gate post base plates to the floor with 3/8" anchors, 3-1/2" (89mm) long.

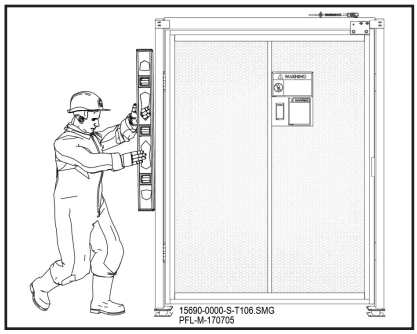

Plumb the Gate Figure 16-25

DANGER

Falling gate hazard! The anchor hole depth should always be deeper than the length of the anchor bolt. The recommended wedge anchor size is 3/8" diameter by 3-1/2" (89mm) long.

Plumb and Square the Gate

1. Plumb and square the gate posts using a plumb bob or a level that is 4' (1219mm) or longer. See Figure 16-25.
2. Measure from the gate post to the Vertical Reciprocating Conveyor (VRC) column.

Install Support Braces

3. Cut two (2) 1-1/2" x 1-1/2" (38mm x 38mm) steel angle support braces and weld to each gate post and to the VRC columns or wall. See Figure 16-26.
4. Tighten all bolts.

Verify the Gate Panel Swing

5. Verify the gate panel swing for proper operation and site operational clearance.
6. Confirm that the gate is plumb and square.
7. Weld the gate header to the gate posts. See Figure 16-27.

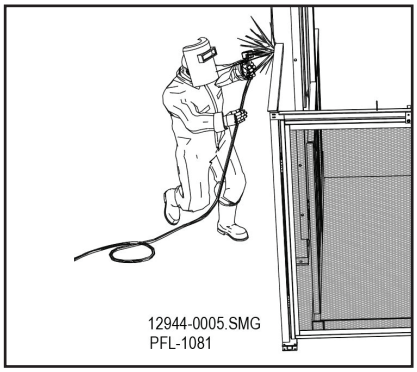

Weld Support Braces Figure 16-26

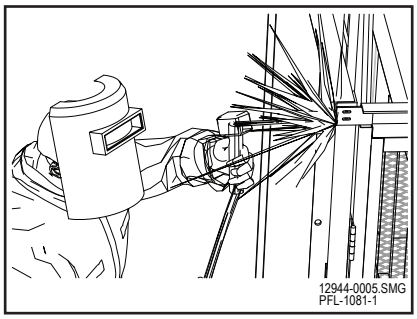

Weld Gate Header to Gate Posts Figure 16-27

MATERIAL HANDLING SOLUTIONS
www.pflow.com
P 414 352 9000
F 414 352 9002
6720 N. Teutonia Ave.
Milwaukee, WI 53209

Install the Gate Interlock

Install the gate panel interlock and interlock keeper assembly. See Figure 16-28. Refer to the interlock installation section in the installation manual.

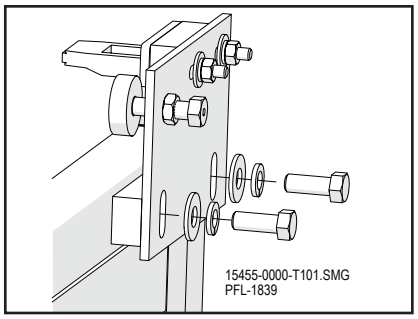

Install Interlock Keeper Assembly
Figure 16-28

Verify the Gate Interlock Operation

1. Verify that the gate panel swings smoothly.
2. Verify that the gate door opens when the carriage is present and does not open when the carriage is not present.
3. Verify that the gate panel remains locked when the carriage leaves the floor level.

Adjust the Interlock Keeper Assembly Magnet

1. With the VRC carriage on the same level as the gate, make sure that the interlock keeper assembly magnet holds the panel closed until the operator pulls open the panel. The magnet will require field adjustment to fine tune the panel “held closed” feature.
2. Adjust the panel position by backing off the magnet locking nut. See Figure 16-29.
3. Rotate the magnet hex head bolt to position the panel.
4. Secure the magnet position by tightening the magnet locking nut.

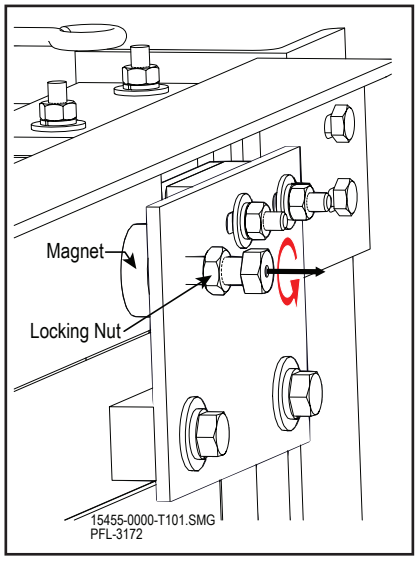

Adjust Panel Position Figure 16-29

PFLOW INDUSTRIES MATERIAL HANDLING SOLUTIONS
www.pflow.com
P 414 352 9000
F 414 352 9002
6720 N. Teutonia Ave.
Milwaukee, WI 53209

Establish Placement

NOTE *It is often possible to assemble the gate on the ground. However, it may not be possible to erect the fully assembled gate.*

Horizontal assembly and vertical assembly methods are included in this manual. Both methods require additional support and temporary bracing during assembly.

1. Measure the outside edge to the outside edge of the carriage to locate the center line. Mark the center line with a pencil on the top of the carriage deck. See Figure 16-30.
2. Position a carpenter square on the edge of the carriage to extend the center line onto the floor 10" (254mm) away from the carriage. See Figure 16-30.
3. Mark a chalk line on the floor to ensure the center of the gate is on the center line of the carriage. See Figure 16-30.

NOTE *The ideal position of the gate panel is a maximum of 6" (152mm) from the inside of the gate panel to the front edge of the carriage. Local codes may have specific requirements concerning this distance.*

4. When the measurement from the back side of the gate panel to the carriage has been determined, snap a chalk line to identify the position of the gate panel parallel to the carriage. See Figure 16-30.
5. Reference the PFlow Industries, Inc. General Arrangement (GA) drawing to determine the overall gate width.
6. Measure the overall gate width and mark the final position for the gate posts. See Figure 16-31.

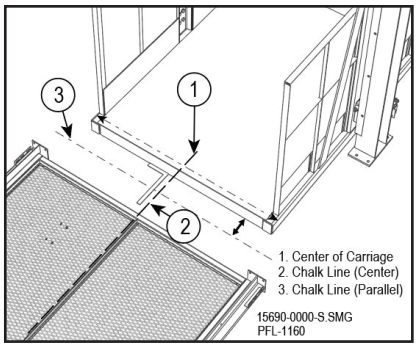

Establish Center Line Figure 16-30

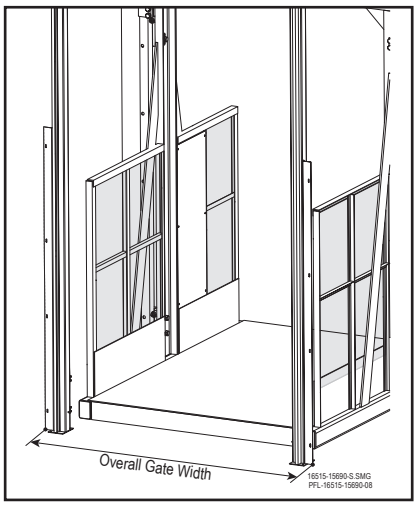

Establish Gate Width Figure 16-31

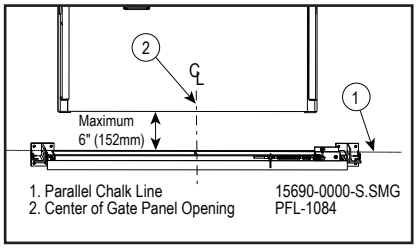

Alignment Figure 16-32

MATERIAL HANDLING SOLUTIONS
www.pflow.com
P 414 352 9000
F 414 352 9002
6720 N. Teutonia Ave.
Milwaukee, WI 53209

Prepare the Chains in the Gate Posts

For shipping purposes, the single vertical acting gate panel counterweight is secured with a shipping screw located toward the bottom of the gate post assembly.

To prevent the chain from falling down into the gate post:

1. Remove shipping screw located toward the bottom of the gate post assembly. See Figure 16-33.
2. Pull the counterweight chain forward until the counterweight is moved forward about 2' (610mm).
3. Make sure the counterweight is above the shipping screw and replace the shipping screw. See Figure 16-34.
4. Tie one end of a string to the counterweight chain about 3 links back.
5. Tie the other end of the string to the base plate of the gate post assembly.
6. Carefully handle the gate post assembly to keep the counterweight inside the gate post tube. Keep the counterweight above the shipping screw until the gate post is stood upright.

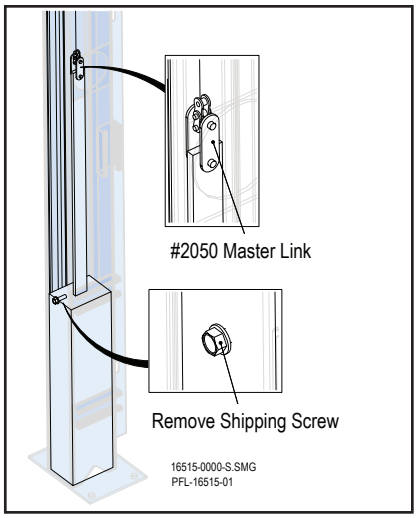

Post Assembly Counterweight Figure 16-33

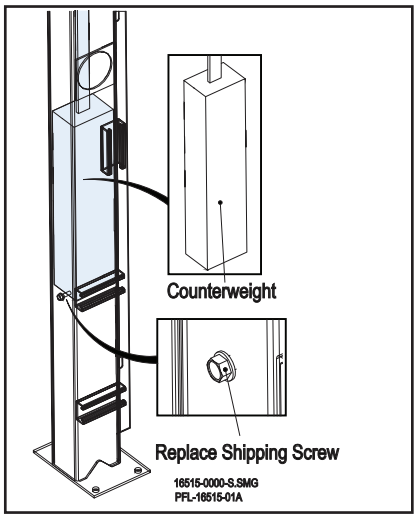

Post Assembly Counterweight Figure 16-34

PFLOW INDUSTRIES MATERIAL HANDLING SOLUTIONS
www.pflow.com
P 414 352 9000
F 414 352 9002
6720 N. Teutonia Ave.
Milwaukee, WI 53209

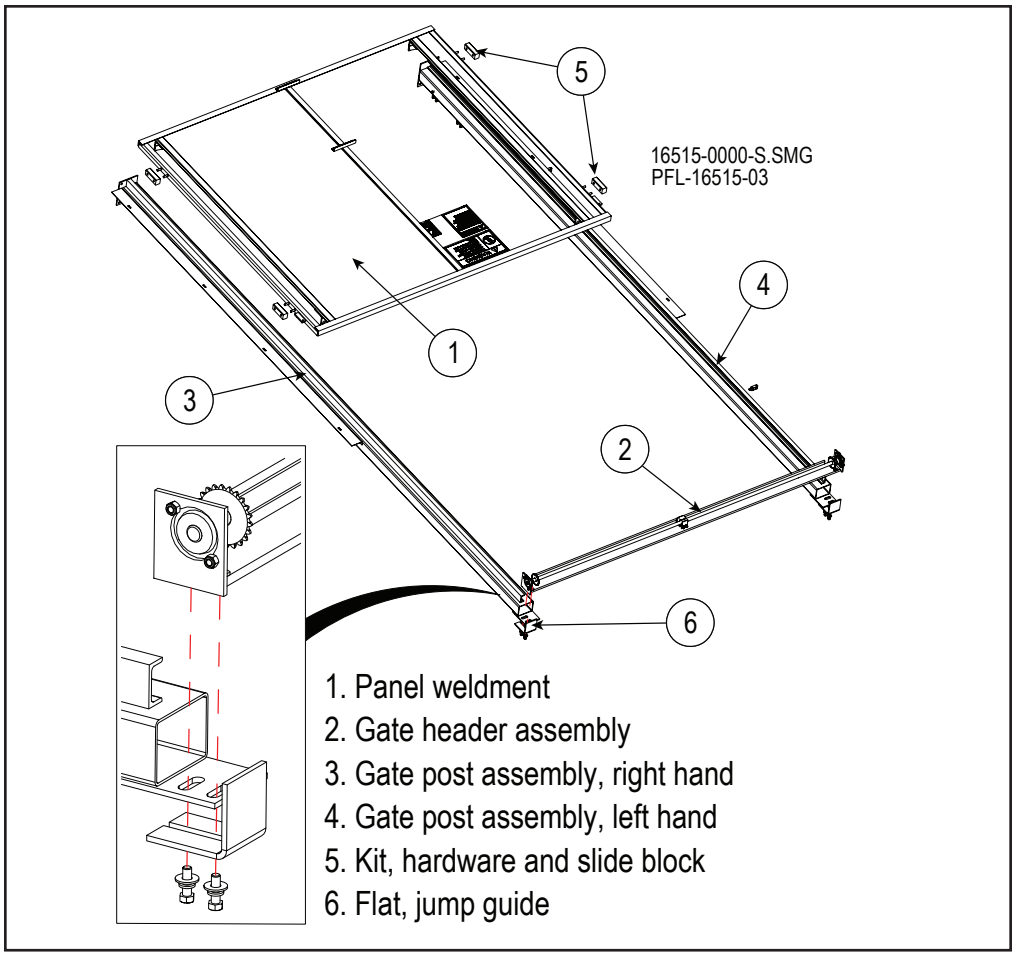

Single VA Gate Layout Figure 16-35

Begin Horizontal Assembly

1. Lay the gate in the proper position to allow for safe handling and efficient fit-up to the VRC. See Figure 16-35.
2. Lay each gate post (left side and right side) with the panel guide channel facing up, and the channel open towards the middle.

Install the Header

1. Position the gate header with the sprockets facing up and ends flush.
2. Position the chain jump guides to leave space for the chain. See Figure 16-36.
3. Bolt the chain jump guides and header to the post using four (4) 3/8-16 x 1-1/4" long bolts with lock and flat washers (weld-nut on header angle).
4. Align the gate header, making sure the posts are square, and snug the attachment hardware.

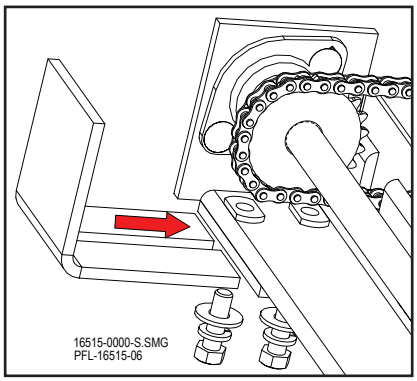

Position Chain Jump Guides Figure 16-36

PFLOW INDUSTRIES MATERIAL HANDLING SOLUTIONS
www.pflow.com
P 414 352 9000
F 414 352 9002
6720 N. Teutonia Ave.
Milwaukee, WI 53209

⚠ WARNING

Entanglement hazard! Remove gloves, secure long hair, wear snug-fitting clothing, and avoid wearing jewelry while working with chains.

Crush hazard! Keep hands outside and above the chain. If the lift chain does not reach the wheelblock, carefully work the lift chain around the sprocket until it does reach the wheelblock. Lift the chain from the sides. If the chain drops unaided, the weight of the chain will crush fingers. Do not allow the chain to come off the sprocket.

Header falling hazard! Loosen but do not remove the bolts when adjusting the chain jump guide or the headers. Once assembled, the header can fall if the bolts are completely removed.

NOTE *The chains must be equal in length on both sides of the sprocket to align the position of the counterweight. If the chains are not equal, work the chain on the front side of the sprockets.*

Install the Chains

1. Make sure to eliminate any chain twist. The chain should be straight between the counterweight tab and the sprocket.
2. Remove the #2050 master links from the end of the #35 chain on each post.
3. Place the center link on top of the sprocket. See Figure 16-37.
4. Thread the chain over the sprocket on the header.
5. Pull the chain tight over the sprocket to remove the slack in the chain without moving the counterweight.
6. Re-attach the #2050 master links to the #35 chain and remove the string.
7. Verify that the chains on each end of the gate are equal in length from the sprocket to the panel.
8. Loosen the header/post hardware to allow the chain jump guide to slide down into position. Do not loosen the hardware to the point that the header falls off. See Figure 16-38.
9. Set the space between the chain jump guides approximately +/- 1/8" from the top of the chain.
10. Securely attach the chain jump guide.

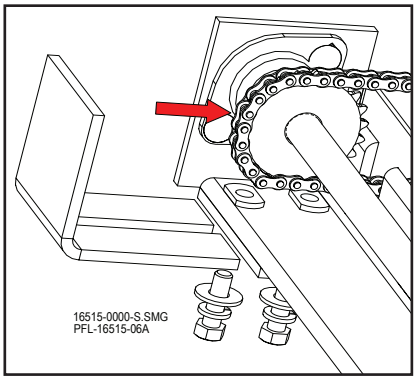

Position Center of Chain Figure 16-37

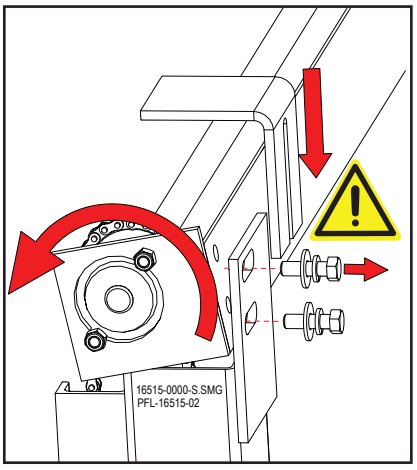

Attach Chain Jump Guides Figure 16-38

PFLOW INDUSTRIES MATERIAL HANDLING SOLUTIONS
www.pflow.com
P 414 352 9000
F 414 352 9002
6720 N. Teutonia Ave.
Milwaukee, WI 53209

Assemble the Gate Panel

1. Place the gate panel face up between the guide tracks on the gate posts.
2. Insert the guide blocks and attach to the gate panel and guide track. See Figure 16-39 and Figure 16-40.
3. Attach the panel bumper to the bottom of the panel. See Figure 16-41.

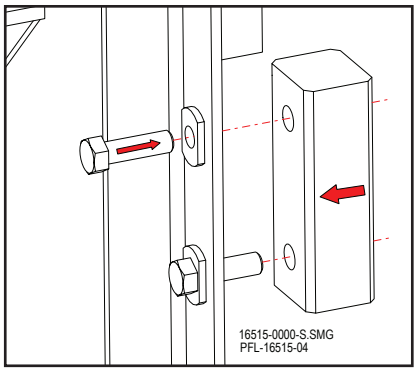

Attach Guide Blocks to Gate Panel Figure 16-39

Attach the Gate Panel to the Gate Chains

1. Slide the gate panel toward the header. It should move without binding on the guide tracks.
2. Connect the #2050 master link to the gate panel. See Figure 16-40 and Figure 16-42.
3. Verify that the chain length is equal on each side.
4. Slide the gate panel to the bottom of the gate posts.

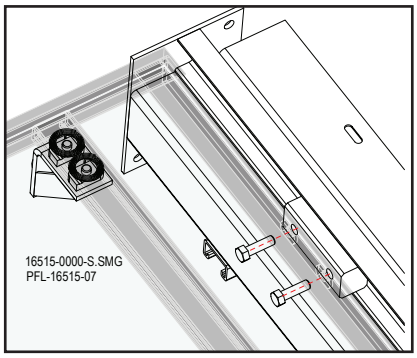

Attach Guide Blocks to Guide Track Figure 16-40

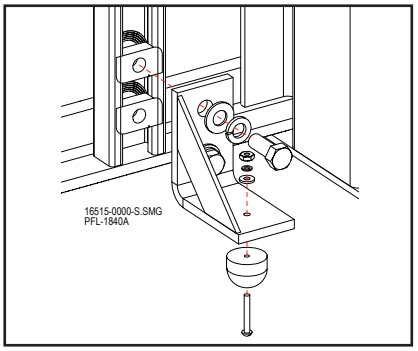

Attach Panel Bumper Figure 16-41

Connect Master Link Figure 16-43

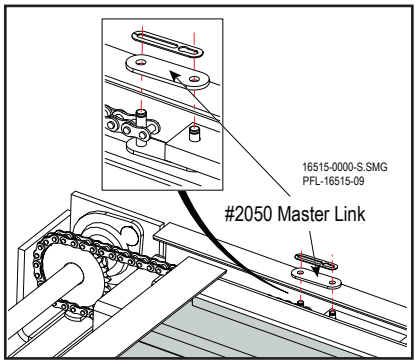

Connect Master Link Figure 16-42

PFLOW INDUSTRIES MATERIAL HANDLING SOLUTIONS
www.pflow.com
P 414 352 9000
F 414 352 9002
6720 N. Teutonia Ave.
Milwaukee, WI 53209

Raise and Secure the Gate

1. Place a strap around the gate posts to secure and maintain the assembly in place. See Figure 16-44.

DANGER

Falling gate hazard! Do not lift the VA gate assembly by the header shaft or by a single strap at the center of the header.

2. Place two (2) straps around the header, one near each gate post. Avoid the brackets at the top of each post. See Figure 16-44.
3. To avoid sudden panel and counterweight movement, slowly raise and secure the gate assembly into place.
4. Tie off or continue to support the gate assembly to prevent tipping or accidental movement.

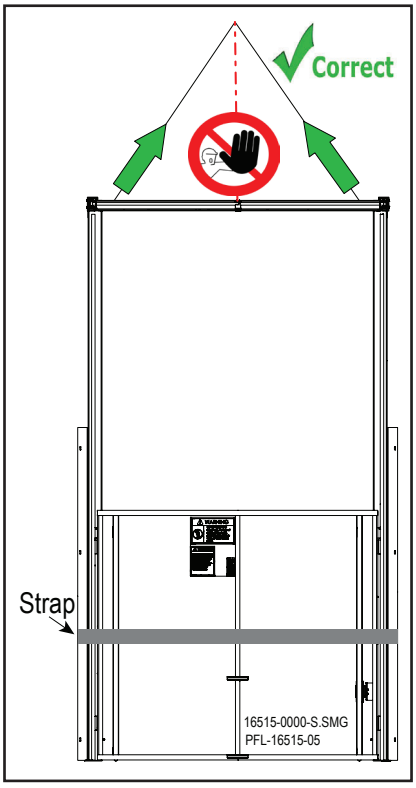

Secure and Lift Gate Assembly Figure 16-44

Align the Gate Assembly

1. Align the center of the gate to the center of the carriage with the front side of the gate panel facing out.
2. Align the back side of the gate panel on the parallel chalk line.

Anchor the Gate Post Base Plates

3. Drill and anchor the gate post base plates to the floor with 3/8" anchors, 3-1/2" (89mm) long.

DANGER

Falling gate hazard! The anchor hole depth should always be deeper than the length of the anchor bolt. The recommended wedge anchor size is 3/8" diameter by 3-1/2" (89mm) long.

PFLOW INDUSTRIES
MATERIAL HANDLING SOLUTIONS
www.pflow.com
P 414 352 9000
F 414 352 9002
6720 N. Teutonia Ave.
Milwaukee, WI 53209

Plumb and Square the Gate

1. Plumb and square the gate posts using a plumb bob or a level that is 4' (1219mm) or longer. See Figure 16-45.
2. Measure from the gate post to the Vertical Reciprocating Conveyor (VRC) column.

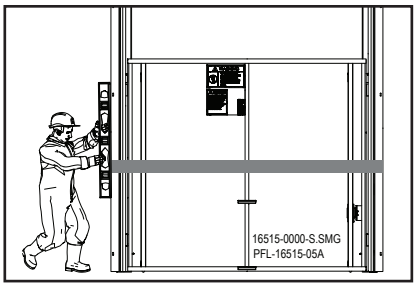

Plumb the Gate Figure 16-45

Install Support Braces

1. Cut two (2) 1-1/2" x 1-1/2" (38mm x 38mm) steel angle support braces and weld to each gate post and to the VRC columns or wall. See Figure 16-46.
2. Tighten all bolts.
3. Confirm that the gate is plumb and square.
4. Weld the gate header to the gate posts. See Figure 16-47.
5. Remove all straps on the gate.
6. Slowly slide the panel down until the chains are tight and the counterweights are off the shipping screws.
7. Remove the counterweight shipping screw.

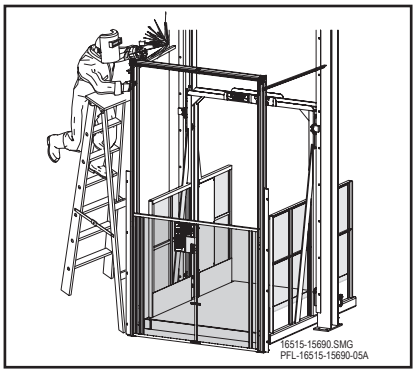

Weld Support Braces Figure 16-46

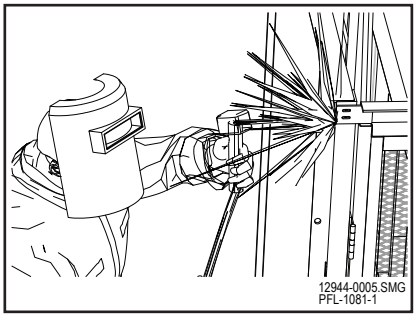

Weld Gate Header to Gate Posts Figure 16-47

MATERIAL HANDLING SOLUTIONS
www.pflow.com
P 414 352 9000
F 414 352 9002
6720 N. Teutonia Ave.
Milwaukee, WI 53209

Adjust the Gate Panel

⚠WARNING

The gate panel must float freely within the guide track or the panel interlock will not operate safely. Make sure the gate is fit properly.

Guide block fit up is important for the gate panel to operate properly and safely. This over-rides any other horizontal alignment dimensions.

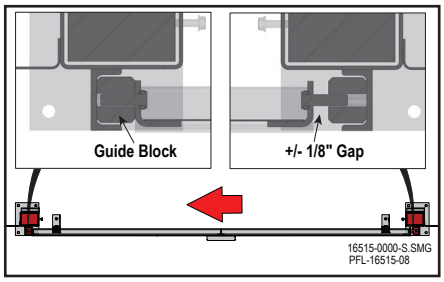

Guide Block Gap 16-48

1. Snug the gate panel and slide the blocks on one side of the channel guides.
2. Set a +/- 1/8" (3mm) gap between the opposite side guide block and the gate panel. Align the gate post or trim the guide blocks if necessary. The guide block must stay trapped in the guide track. See Figure 16-48.
3. Make sure the gate header is level horizontally and that the gate posts are plumb and square in both directions. Shim and / or adjust as necessary.
4. Verify that the panel travels up and down evenly and is not binding on the guide tracks.
5. Adjust the bumpers as necessary.
6. Adjust the post spacing or panel slide blocks as necessary.
7. Secure and brace the gate posts to the enclosure panels, the building structure, or the VRC columns as required.
8. Verify that the gate panel moves freely during travel from the top to the bottom of the posts.
9. Verify that the gate panel clears the fully open height. If the counterweight bottoms out in the gate post before the gate panel is fully open, remove chain links to shorten the chain length.
10. Lift the gate panel approximately 2' (610mm) off the floor to verify that the gate panel is properly counterbalanced with panel accessories (e.g., cams, interlock flats) on the panel. The gate panel should remain in this position.
    - If the gate continues to rise, add steel bar stock to the inside bottom center of the gate panel frame.
    - If the gate drops, contact PFlow Industries, Inc. Product Support Department for instructions.
11. Verify that the counterweight is not hitting the post base plate.

PFLOW INDUSTRIES MATERIAL HANDLING SOLUTIONS
www.pflow.com
P 414 352 9000
F 414 352 9002
6720 N. Teutonia Ave.
Milwaukee, WI 53209

Install the Gate Panel Interlock

Install the gate panel interlock. Refer to the interlock installation section in the installation manual.

Verify the Gate Operation

1. Verify that the gate panel runs smoothly.
2. Verify that the gate panel opens when the carriage is present and does not open when the carriage is not present.
3. Verify that the gate panel remains locked when the carriage leaves the floor level.

PFLOW INDUSTRIES MATERIAL HANDLING SOLUTIONS
www.pflow.com
P 414 352 9000
F 414 352 9002
6720 N. Teutonia Ave.
Milwaukee, WI 53209

Establish Placement

Make sure the placement of the gate has been established. Follow instructions beginning in Section 16, page 14.

Prepare the Chains in the Gate Posts

Make sure the chains and counterweights are prepared before raising the gate posts. Follow instructions beginning in Section 16, page 15.

⚠CAUTION

Lifting hazard! Components and accessories are heavy.
To prevent serious personal injury, use the appropriate lifting apparatus, tie offs, or help when moving, lifting or assembling the components or accessories.

Raise and Secure the Gate Posts

1. Raise, position, and secure one gate post with the back face of the gate post on the parallel chalk line. Make sure the channel on the gate post is facing out and the opening of the channel is facing in. See Figure 16-49.

⚠DANGER

Falling gate hazard! The anchor hole depth should always be deeper than the length of the anchor bolt. The recommended wedge anchor size is 3/8" diameter by 3-1/2" (89mm) long.

2. Drill and anchor the gate post base plate to the floor with 3/8" anchors, 3-1/2" (89mm) long.
3. Temporarily brace the gate post to the Vertical Reciprocating Conveyor (VRC) column or wall. See Figure 16-50.
4. Raise, position, and secure the other gate post with the back face of the gate post on the parallel chalk line. Make sure the channel on the gate post is facing out and the opening of the channel is facing in.
5. Temporarily brace the second gate post to the VRC column or wall. See Figure 16-50. ***Do not anchor this post at this time.***

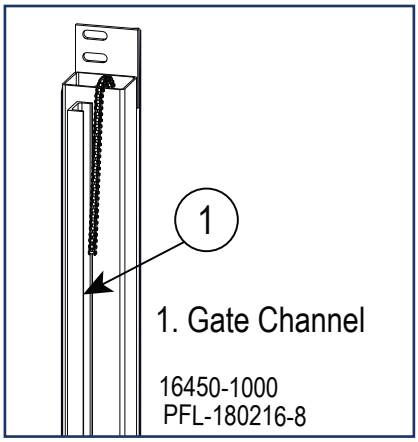

Channel Position Figure 16-49

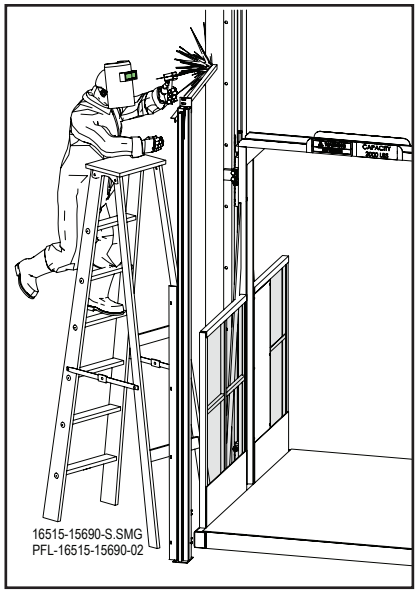

Temporarily Brace Gate Post Figure 16-50

PFLOW INDUSTRIES MATERIAL HANDLING SOLUTIONS
www.pflow.com
P 414 352 9000
F 414 352 9002
6720 N. Teutonia Ave.
Milwaukee, WI 53209

⚠ WARNING

Entanglement hazard! Remove gloves, secure long hair, wear snug-fitting clothing, and avoid wearing jewelry while working with chains.

Crush hazard! Keep hands outside and above the chain. If the lift chain does not reach the wheelblock, carefully work the lift chain around the sprocket until it does reach the wheelblock. Lift the chain from the sides. If the chain drops unaided, the weight of the chain will crush fingers. Do not allow the chain to come off the sprocket.

Header falling hazard! Loosen but do not remove the bolts when adjusting the chain jump guide or the headers. Once assembled, the header can fall if the bolts are completely removed.

Install the Header

1. Position the gate header with the sprockets facing out and with the ends flush. See Figure 16-51.
2. Position the chain jump guides to leave space for the chain. See Figure 16-52.
3. Bolt the chain jump guides and gate header to the gate post using four (4) 3/8-16 x 1-1/4" long bolts with lock and flat washers (weld-nut on header angle).
4. Align the gate header, making sure the gate posts are square, and snug the attachment hardware.

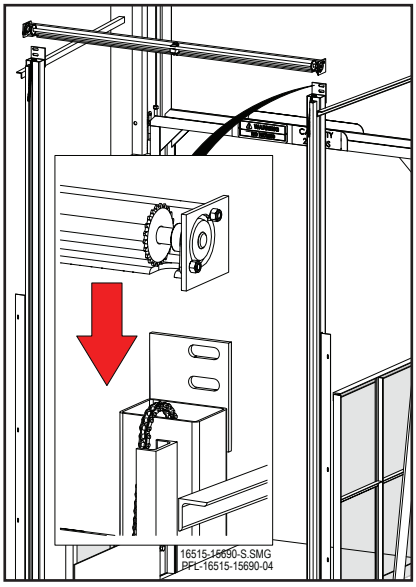

Position Chain Jump Guides Figure 16-51

Install the Chains

NOTE *The chains must be equal in length on both sides of the sprocket to align the position of the counterweight. If the chains are not equal, work the chain on the front side of the sprockets.*

1. Make sure to eliminate any chain twist. The chain should be straight between the counterweight tab and the sprocket.
2. Remove the #2050 master links from the end of the #35 chain on each post.
3. Place the center link on top of the sprocket.

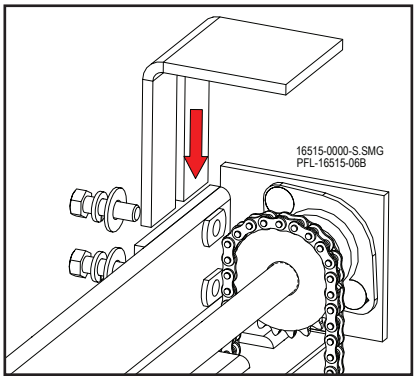

Position Chain Jump Guides Figure 16-52

PFLOW INDUSTRIES MATERIAL HANDLING SOLUTIONS
www.pflow.com
P 414 352 9000
F 414 352 9002
6720 N. Teutonia Ave.
Milwaukee, WI 53209

Install the Chains (continued)

4. Thread the chain over the sprockets on the header. See Figure 16-53.
5. Pull the chain tight over the sprocket to remove the slack in the chain without moving the counterweight.
6. Re-attach the #2050 master links to the #35 chain and remove the strings.
7. Verify that the chains on each end of the gate are equal in length from the sprocket to the panel.
8. Loosen the header/post hardware to allow the chain jump guide to slide down into position. Do not loosen the hardware to the point that the header falls off. See Figure 16-54.
9. Set the space between the chain jump guides approximately +/- 1/8" from the top of the chain.
10. Securely attach the chain jump guide.
11. Remove the counterweight shipping screw.
12. Carefully pull the chain up high enough to have the counterweight above the shipping screw.
13. Re-install the counterweight shipping screw.

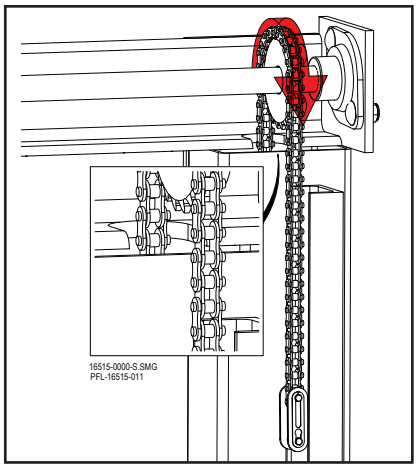

Thread Chain Over the Sprockets Figure 16-53

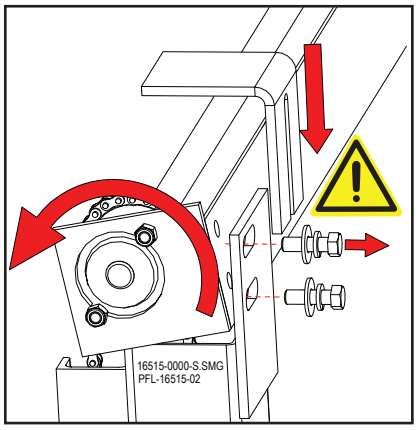

Attach Chain Jump Guides Figure 16-54

Assemble the Gate Panel

1. Place the gate panel between the guide tracks on the gate posts.
2. Insert the guide blocks and attach to the gate panel and guide track. See Figure 16-55 and Figure 16-56.
3. Attach the panel bumper at the bottom of the panel. See Figure 16-57.

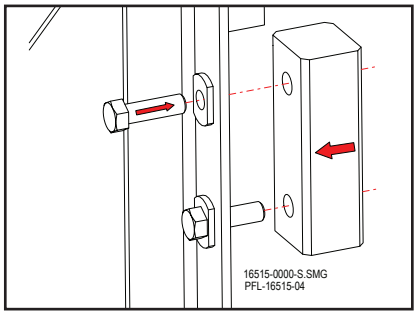

Attach Guide Blocks Figure 16-55

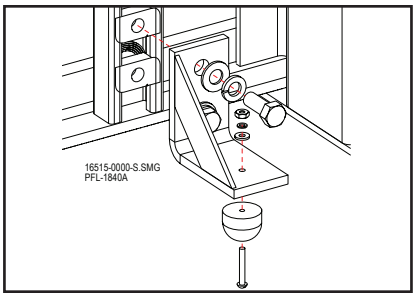

Attach Panel Bumper Figure 16-57

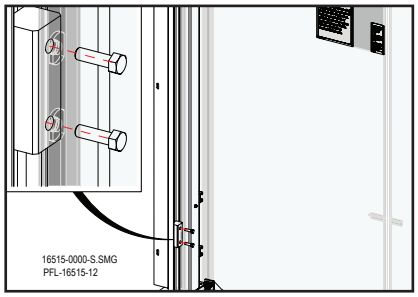

Attach Guide Blocks Figure 16-56

PFLOW INDUSTRIES MATERIAL HANDLING SOLUTIONS
www.pflow.com
P 414 352 9000
F 414 352 9002
6720 N. Teutonia Ave.
Milwaukee, WI 53209

Attach the Gate Panel to the Gate Chains

1. Use an appropriate lifting device to carefully slide the gate panel up towards the gate header. See Figure 16-58.

NOTE *The gate panel should move up without binding on the guide tracks.*

2. Continue to support the gate panel and attach the gate panel to the chains.
3. Connect the #2050 master links to the gate panel and remove the string.
4. Verify the chain length is equal on each side.

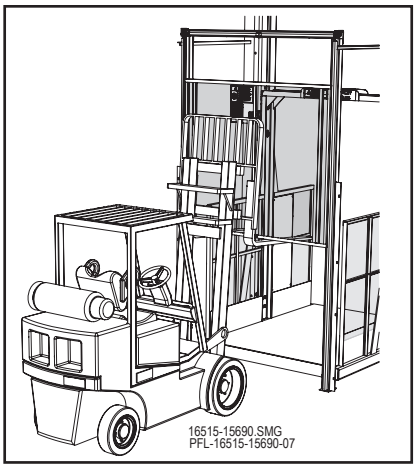

Lift Gate Panel Figure 16-58

Install Support Braces

1. Measure from the gate post to the Vertical Reciprocating Conveyor (VRC) column.
2. Cut two (2) 1-1/2" x 1-1/2" (38mm x 38mm) steel angle support braces and weld to each gate post and to the VRC columns or wall. See Figure 16-59.
3. Confirm that the gate is plumb and square.
4. Tighten all bolts.
5. Weld the gate header to the gate posts. See Figure 16-60.
6. Slowly slide the panel down until the chains are tight and the counterweights are off the shipping screws.
7. Remove the counterweight shipping screw.

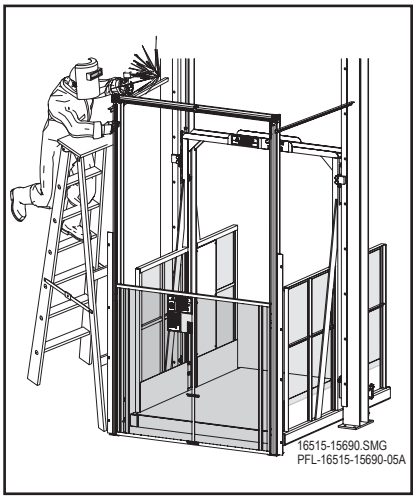

Weld Support Braces Figure 16-59

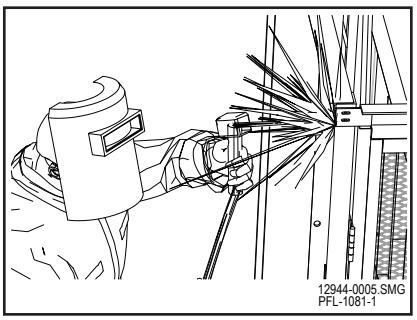

Weld Gate Header to Gate Posts Figure 16-60

MATERIAL HANDLING SOLUTIONS
www.pflow.com
P 414 352 9000
F 414 352 9002
6720 N. Teutonia Ave.
Milwaukee, WI 53209

Adjust the Gate Panel

⚠ WARNING

The gate panel must float freely within the guide track or the panel interlock will not operate safely. Make sure the gate is fit properly.

Guide block fit up is important for the gate panel to operate properly and safely. This over-rides any other horizontal alignment dimensions.

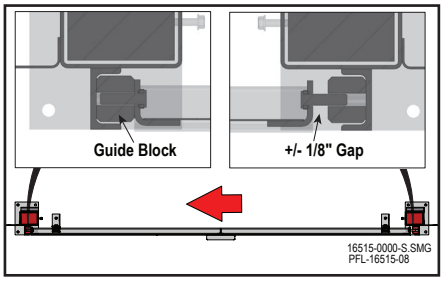

Guide Block Gap 16-61

1. Snug the gate panel and slide the blocks on one side of the channel guides.
2. Set a +/- 1/8" (3mm) gap between the opposite side guide block and the gate panel. Align the gate post or trim the guide blocks if necessary. The guide block must stay trapped in the guide track. See Figure 16-61.
3. Make sure the gate header is level horizontally and that the gate posts are plumb and square in both directions. Shim and / or adjust as necessary.
4. Verify that the panel travels up and down evenly and is not binding on the guide tracks.
5. Adjust the bumpers as necessary.
6. Adjust the post spacing or panel slide blocks as necessary.
7. Secure and brace the gate posts to the building structure or the VRC columns as required.
8. Verify that the gate panel moves freely during travel from the top to the bottom of the posts.
9. Verify that the gate panel clears the fully open height. If the counterweight bottoms out in the gate post before the gate panel is fully open, remove chain links to shorten the chain length.
10. Lift the gate panel approximately 2' (610mm) off the floor to verify that the gate panel is properly counterbalanced with panel accessories (e.g., cams, interlock flats) on the panel. The gate panel should remain in this position.
    - If the gate continues to rise, add steel bar stock to the inside bottom center of the gate panel frame.
    - If the gate drops, contact PFlow Industries, Inc. Product Support Department for instructions.
11. Verify that the counterweight is not hitting the post base plate.

MATERIAL HANDLING SOLUTIONS
www.pflow.com
P 414 352 9000
F 414 352 9002
6720 N. Teutonia Ave.
Milwaukee, WI 53209

Install the Gate Interlock

Install the gate panel interlock. Refer to the interlock installation section in the installation manual.

Verify the Gate Operation

1. Verify that the gate panel runs smoothly.
2. Verify that the gate door opens when the carriage is present and does not open when the carriage is not present.
3. Verify that the gate panel remains locked when the carriage leaves the floor level.

MATERIAL HANDLING SOLUTIONS
www.pflow.com
P 414 352 9000
F 414 352 9002
6720 N. Teutonia Ave.
Milwaukee, WI 53209

Establish Placement

NOTE *It is often possible to assemble the gate on the ground. However, it may not be possible to erect the fully assembled gate.*

Horizontal assembly and vertical assembly methods are included in this manual. Both methods require additional support and temporary bracing during assembly.

1. Measure the outside edge to the outside edge of the carriage to locate the center line. Mark the center line with a pencil on the top of the carriage deck. See Figure 16-62 and Figure 16-63.
2. Position a carpenter square on the edge of the carriage to extend the center line onto the carriage deck.

NOTE *The ideal position of the outside edge of the gate post is at the front edge of the carriage.*

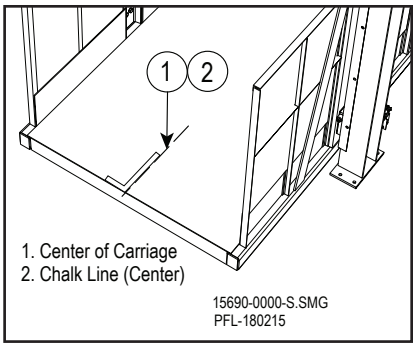

Establish Center Line Figure 16-62

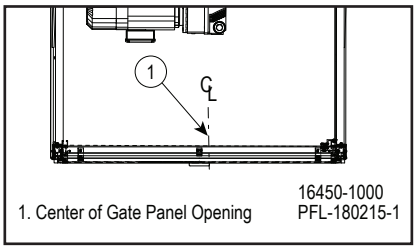

Alignment Figure 16-63

PFLOW INDUSTRIES MATERIAL HANDLING SOLUTIONS
www.pflow.com
P 414 352 9000
F 414 352 9002
6720 N. Teutonia Ave.
Milwaukee, WI 53209

Prepare the Chains in the Gate Posts

For shipping purposes, the single vertical acting gate panel counterweight is secured with a shipping screw located toward the bottom of the gate post assembly.

To prevent the chain from falling down into the gate post:

1. Remove shipping screw located toward the bottom of the gate post assembly. See Figure 16-64.
2. Pull the counterweight chain forward until the counterweight is moved forward about 2' (610mm).
3. Make sure the counterweight is above the shipping screw and replace the shipping screw. See Figure 16-65.
4. Tie one end of a string to the counterweight chain about 3 links back.
5. Tie the other end of the string to the base plate of the gate post assembly.
6. Carefully handle the gate post assembly to keep the counterweight inside the gate post tube. Keep the counterweight above the shipping screw until the gate post is stood upright.

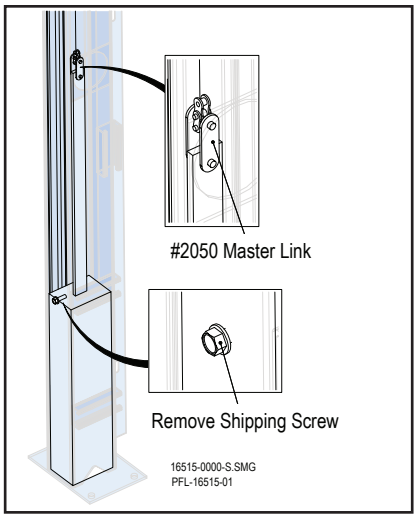

Post Assembly Counterweight Figure 16-64

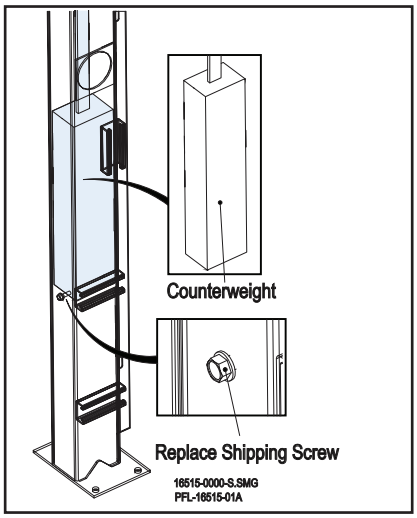

Post Assembly Counterweight Figure 16-65

PFLOW INDUSTRIES MATERIAL HANDLING SOLUTIONS
www.pflow.com
P 414 352 9000
F 414 352 9002
6720 N. Teutonia Ave.
Milwaukee, WI 53209

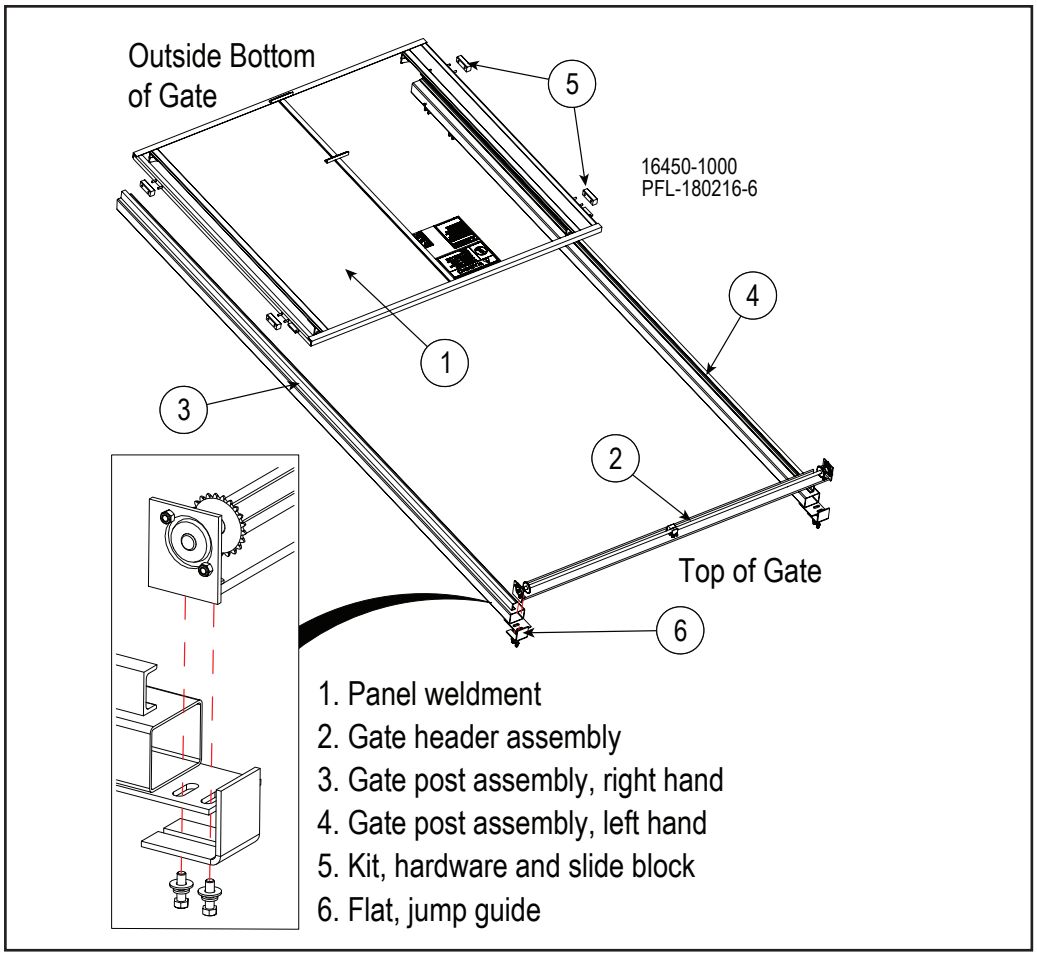

Single VA Gate Layout Figure 16-66

Begin Horizontal Assembly

1. Lay the gate in the proper position to allow for safe handling and efficient fit-up to the VRC. See Figure 16-66.
2. Lay each gate post (left side and right side) with the panel guide channel facing up, and the channel open towards the middle.

Install the Header

1. Position the gate header with the sprockets facing up and ends flush.
2. Position the chain jump guides to leave space for the chain. See Figure 16-67.
3. Bolt the chain jump guides and header to the post using four (4) 3/8-16 x 1-1/4" long bolts with lock and flat washers (weld-nut on header angle).
4. Align the gate header, making sure the posts are square, and snug the attachment hardware.

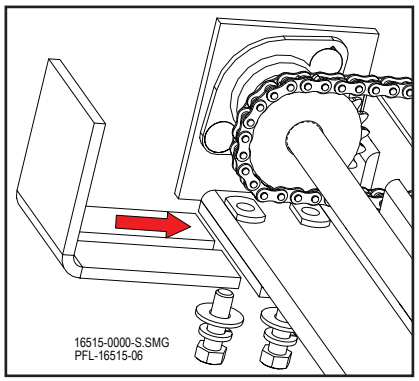

Position Chain Jump Guides Figure 16-67

PFLOW INDUSTRIES MATERIAL HANDLING SOLUTIONS
www.pflow.com
P 414 352 9000
F 414 352 9002
6720 N. Teutonia Ave.
Milwaukee, WI 53209

⚠ WARNING

Entanglement hazard! Remove gloves, secure long hair, wear snug-fitting clothing, and avoid wearing jewelry while working with chains.

Crush hazard! Keep hands outside and above the chain. If the lift chain does not reach the wheelblock, carefully work the lift chain around the sprocket until it does reach the wheelblock. Lift the chain from the sides. If the chain drops unaided, the weight of the chain will crush fingers. Do not allow the chain to come off the sprocket.

Header falling hazard! Loosen but do not remove the bolts when adjusting the chain jump guide or the headers. Once assembled, the header can fall if the bolts are completely removed.

Install the Chains

NOTE *The chains must be equal in length on both sides of the sprocket to align the position of the counterweight. If the chains are not equal, work the chain on the front side of the sprockets.*

1. Make sure to eliminate any chain twist. The chain should be straight between the counterweight tab and the sprocket.
2. Remove the #2050 master links from the end of the #35 chain on each post.
3. Place the center link on top of the sprocket. See Figure 16-68.
4. Thread the chain over the sprockets on the header.
5. Pull the chain tight over the sprocket to remove the slack in the chain without moving the counterweight.
6. Re-attach the #2050 master links to the #35 chain and remove the strings.
7. Verify that the chains on each end of the gate are equal in length from the sprocket to the panel.
8. Loosen the header/post hardware to allow the chain jump guide to slide down into position. Do not loosen the hardware to the point that the header falls off. See Figure 16-69.
9. Set the space between the chain jump guides approximately +/- 1/8" from the top of the chain.
10. Securely attach the chain jump guides.

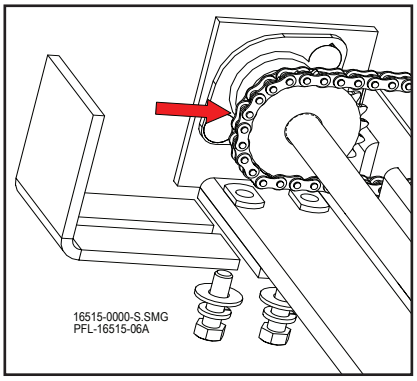

Position Center of Chain Figure 16-68

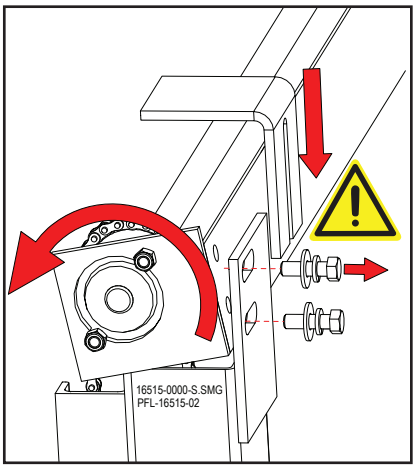

Attach Chain Jump Guides Figure 16-69

PFLOW INDUSTRIES MATERIAL HANDLING SOLUTIONS
www.pflow.com
P 414 352 9000
F 414 352 9002
6720 N. Teutonia Ave.
Milwaukee, WI 53209

Assemble the Gate Panel

1. Place the gate panel face up between the guide tracks on the gate posts.
2. Insert the guide blocks and attach to the gate panel and guide track. See Figure 16-70 and Figure 16-71.

Attach the Gate Panel to the Gate Chains

1. Slide the gate panel toward the header. It should move without binding on the guide tracks.
2. Connect the #2050 master link to the gate panel. See Figure 16-72 and Figure 16-73.
3. Verify that the chain length is equal on each side.
4. Slide the gate panel to the bottom of the gate posts.

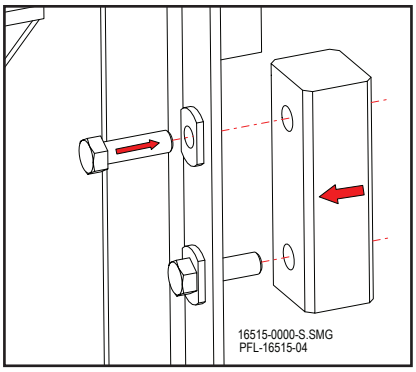

Attach Guide Blocks to the Gate Panel Figure 16-70

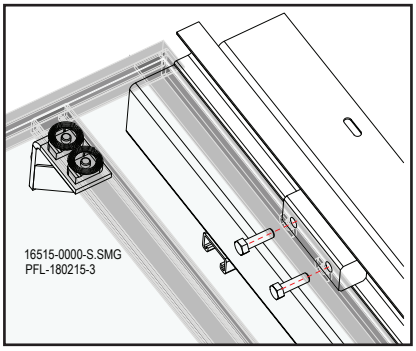

Attach Guide Blocks to the Guide Track Figure 16-71

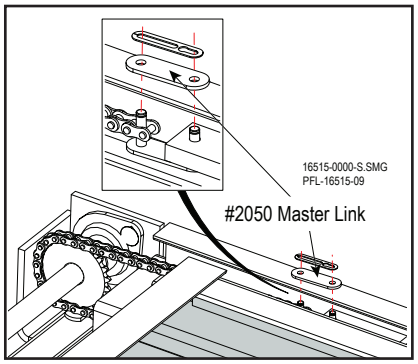

Connect Master Link Figure 16-72

Connect Master Link Figure 16-73

PFLOW INDUSTRIES MATERIAL HANDLING SOLUTIONS
www.pflow.com
P 414 352 9000
F 414 352 9002
6720 N. Teutonia Ave.
Milwaukee, WI 53209

Raise and Secure the Gate

DANGER

Falling gate hazard! Do not lift the VA gate assembly by the header shaft or by a single strap at the center of the header.

1. Place a strap around the gate posts to secure and maintain the assembly in place. See Figure 16-74.
2. Place two (2) straps around the header, one near each gate post. Avoid the brackets at the top of each gate post. See Figure 16-74.
3. To avoid sudden panel and counterweight movement, slowly raise and secure the gate assembly into place.
4. Tie off or continue to support the gate assembly to prevent tipping or accidental movement.

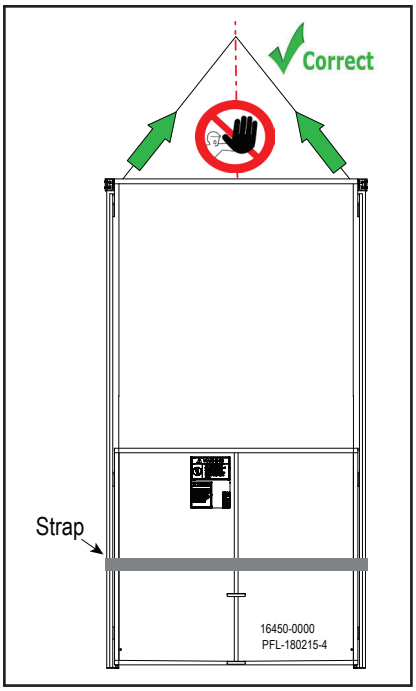

Secure and Lift Gate Assembly Figure 16-74

Align the Gate Assembly

1. Align the center of the gate to the center of the carriage with the front side of the gate panel facing out.
2. Position the gate posts at the front of the carriage.

PFLOW INDUSTRIES MATERIAL HANDLING SOLUTIONS
www.pflow.com
P 414 352 9000
F 414 352 9002
6720 N. Teutonia Ave.
Milwaukee, WI 53209

Plumb and Square the Gate

1. Plumb and square the gate posts using a plumb bob or a level that is 4' (1219mm) or longer. See Figure 16-75.
2. Snug the gate panel and slide the blocks on one side of the channel guides.
3. Set a +/- 1/8" (3mm) gap between the opposite side guide block and the gate panel. Align the gate post or trim the guide blocks if necessary. The guide block must stay trapped in the guide track. See Figure 16-76.
4. Make sure the gate header is level horizontally and that the gate posts are plumb and square in both directions. Shim and / or adjust as necessary.
5. Verify that the panel travels up and down evenly and is not binding on the guide tracks.

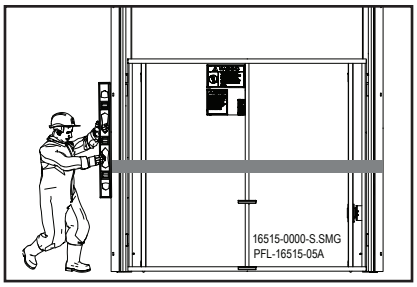

Plumb the Gate Figure 16-75

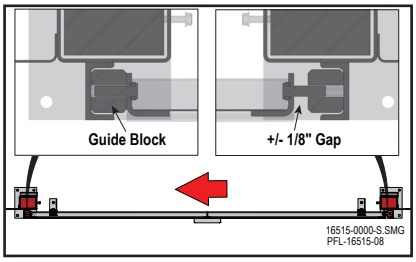

Guide Block Gap 16-76

Weld the Gate Posts

1. Weld the bottom of the gate posts to the carriage deck.
2. Weld the ends of the carriage panel or rails to the gate posts.

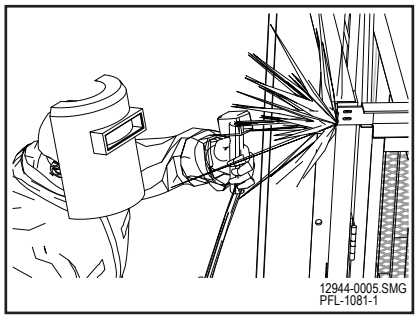

Weld Gate Header to Gate Posts Figure 16-77

Install Support Braces

1. Measure from the gate post to the carriage upright.
2. Cut two (2) 1-1/2" x 1-1/2" (38mm x 38mm) steel angle support braces and weld to each gate post and to the carriage upright.
3. Tighten all bolts.
4. Confirm that the gate is plumb and square.
5. Weld the gate header to the gate posts. See Figure 16-77.
6. Remove all straps on the gate.
7. Slowly slide the panel down until the chains are tight and the counterweights are off the shipping screws.
8. Remove the counterweight shipping screw.

PFLOW INDUSTRIES MATERIAL HANDLING SOLUTIONS
www.pflow.com
P 414 352 9000
F 414 352 9002
6720 N. Teutonia Ave.
Milwaukee, WI 53209

Attach the Bumpers

1. Attach the panel magnetic foot to the bottom of the panel. See Figure 16-78.
2. Attach the panel bumper brackets to the top of the gate panel. See Figure 16-79.

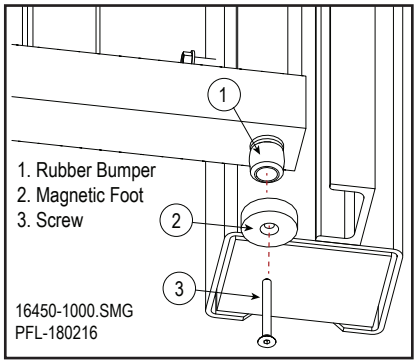

Attach Panel Magnetic Foot Figure 16-78

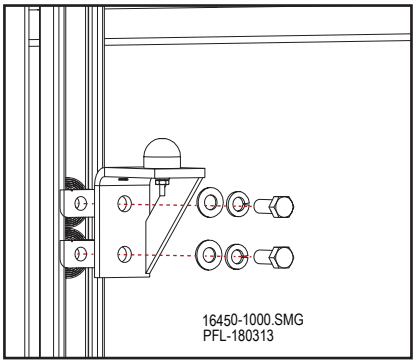

Attach Top Bumper Brackets Figure 16-79

⚠ WARNING

The gate panel must float freely within the guide track or the panel interlock will not operate safely. Make sure the gate is fit properly.

Adjust the Gate Panel

Guide block fit up is important for the gate panel to operate properly and safely. This over-rides any other horizontal alignment dimensions.

1. Verify that the gate panel travels up and down evenly from the top to the bottom of the posts and is not binding on the guide tracks.
2. Adjust the bumpers as necessary.
3. Verify that the gate panel clears the fully open height. If the counterweight bottoms out in the gate post before the gate panel is fully open, remove chain links to shorten the chain length.
4. Lift the gate panel approximately 2' (610mm) off the floor to verify that the gate panel is properly counterbalanced with panel accessories (e.g., cams, interlock flats) on the panel. The gate panel should remain in this position.
   - If the gate continues to rise, add steel bar stock to the inside bottom center of the gate panel frame.
   - If the gate drops, contact PFlow Industries, Inc. Product Support Department for instructions.
5. Verify that the counterweight is not hitting the post base plate.

PFLOW INDUSTRIES MATERIAL HANDLING SOLUTIONS
www.pflow.com
P 414 352 9000
F 414 352 9002
6720 N. Teutonia Ave.
Milwaukee, WI 53209

NOTE

The drop cord is supplied by PFlow Industries, Inc. The wires from the junction box on the carriage to the switch on the gate post is not supplied by PFlow Industries, Inc.

Install the Gate Limit Switch and Stationary Junction Boxes

1. Attach the gate limit switch and bracket to the unistrut mounted on the gate post. See Figure 16-80.
2. Mount the ***carriage mounted junction box*** on the outside of the carriage making sure there are no obstructions above the junction box.
3. On a two-level VRC, mount the ***stationary junction box*** on the same side of the VRC as the carriage mounted junction box. Mount the stationary junction box on the outside of the floor to beam bracing.
4. On a multiple level VRC, mount the ***stationary junction box*** on the same side of the VRC as the carriage mounted junction box. Mount the stationary junction box approximately 8' (2438mm) above the halfway point of the vertical travel of the VRC.

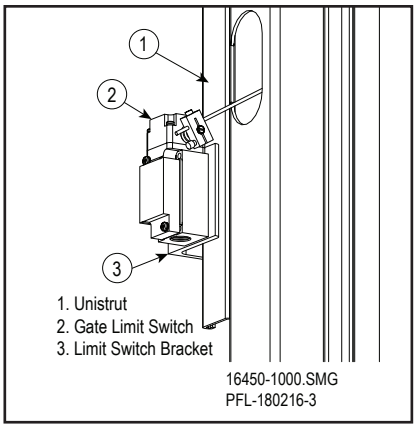

Attach Gate Limit Switch
Figure 16-80

Verify the Gate Operation

1. Verify that the gate panel opens when the carriage is present and does not open when the carriage is not present.
2. Verify that the gate panel remains locked when the carriage leaves the floor level.

PFLOW INDUSTRIES MATERIAL HANDLING SOLUTIONS
www.pflow.com
P 414 352 9000
F 414 352 9002
6720 N. Teutonia Ave.
Milwaukee, WI 53209

Establish Placement

Make sure the placement of the gate has been established. Follow instructions beginning in Section 16, page 29.

Prepare the Chains in the Gate Posts

Make sure the chains and counterweights are prepared before raising the gate posts. Follow instructions beginning in Section 16, page 30.

⚠CAUTION

Lifting hazard! Components and accessories are heavy.
To prevent serious personal injury, use the appropriate lifting apparatus, tie offs, or help when moving, lifting or assembling the components or accessories.

Raise and Secure the Gate Posts

1. Raise, position, and secure one gate post on the carriage deck edge. Make sure the channel on the gate post is facing out and the opening of the channel is facing in. See Figure 16-81.
2. Temporarily brace the gate post to the Vertical Reciprocating Conveyor (VRC) carriage or the carriage column. See Figure 16-82.
3. Raise, position, and secure the other gate post on the carriage deck edge. Make sure the channel on the gate post is facing out and the opening of the channel is facing in.
4. Temporarily brace the second gate post to the VRC carriage or the carriage column.

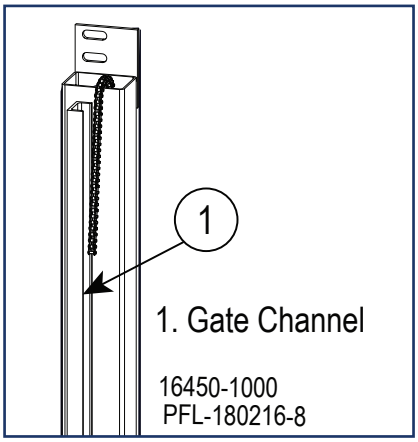

Channel Position Figure 16-81

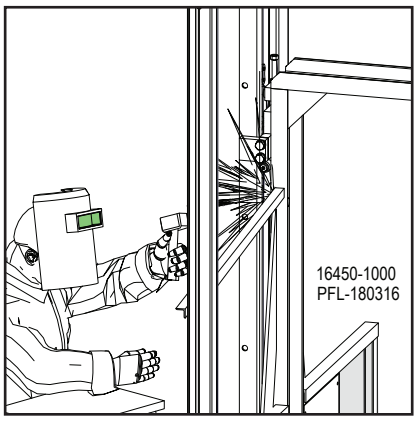

Temporarily Brace Gate Post Figure 16-82

PFLOW INDUSTRIES MATERIAL HANDLING SOLUTIONS
www.pflow.com
P 414 352 9000
F 414 352 9002
6720 N. Teutonia Ave.
Milwaukee, WI 53209

⚠ WARNING

Entanglement hazard! Remove gloves, secure long hair, wear snug-fitting clothing, and avoid wearing jewelry while working with chains.

Crush hazard! Keep hands outside and above the chain. If the lift chain does not reach the wheelblock, carefully work the lift chain around the sprocket until it does reach the wheelblock. Lift the chain from the sides. If the chain drops unaided, the weight of the chain will crush fingers. Do not allow the chain to come off the sprocket.

Header falling hazard! Loosen but do not remove the bolts when adjusting the chain jump guide or the headers. Once assembled, the header can fall if the bolts are completely removed.

Install the Header

1. Position the gate header with the sprockets facing out and with the ends flush. See Figure 16-83.
2. Position the chain jump guides to leave space for the chain. See Figure 16-84.
3. Bolt the chain jump guides and gate header to the gate post using four (4) 3/8-16 x 1-1/4" long bolts with lock and flat washers (weld-nut on header angle).
4. Align the gate header, making sure the gate posts are square, and snug the attachment hardware.

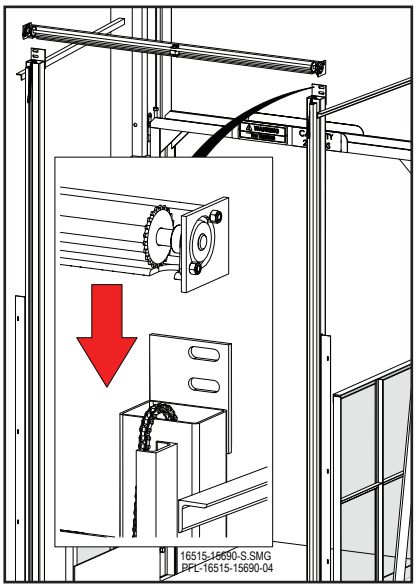

Position Chain Jump Guides Figure 16-83

Install the Chains

NOTE *The chains must be equal in length on both sides of the sprocket to align the position of the counterweight. If the chains are not equal, work the chain on the front side of the sprockets.*

1. Making sure to eliminate any chain twist, the chain should be straight between the counterweight tab and the sprocket.
2. Remove the #2050 master links from the end of the #35 chain on each post.
3. Place the center link on top of the sprocket.

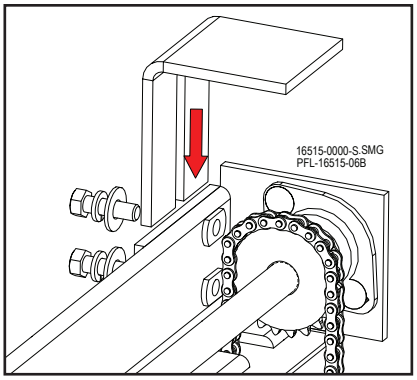

Position Chain Jump Guides Figure 16-84

PFLOW INDUSTRIES MATERIAL HANDLING SOLUTIONS
www.pflow.com
P 414 352 9000
F 414 352 9002
6720 N. Teutonia Ave.
Milwaukee, WI 53209

Install the Chains (continued)

4. Thread the chain over the sprockets on the header. See Figure 16-85.
5. Pull the chain tight over the sprocket to remove the slack in the chain without moving the counterweight.
6. Re-attach the #2050 master links to the #35 chain and remove the strings.
7. Verify that the chains on each end of the gate are equal in length from the sprocket to the panel.
8. Loosen the header/post hardware to allow the chain jump guide to slide down into position. Do not loosen the hardware to the point that the header falls off. See Figure 16-86.
9. Set the space between the chain jump guides approximately +/- 1/8" from the top of the chain.
10. Securely attach the chain jump guide.
11. Remove the counterweight shipping screw.
12. Carefully pull the chain up high enough to have the counterweight above the shipping screw.
13. Re-install the counterweight shipping screw.

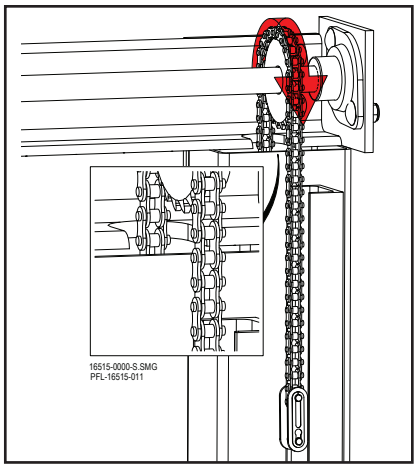

Thread Chain Over the Sprockets Figure 16-85

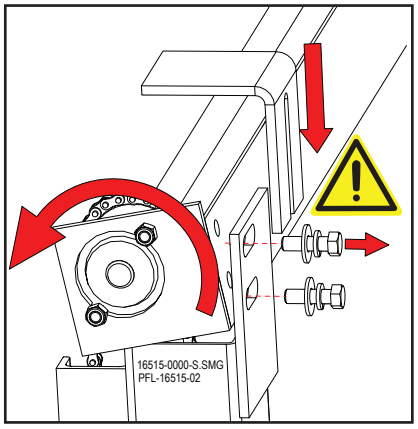

Attach Chain Jump Guides Figure 16-86

PFLOW INDUSTRIES MATERIAL HANDLING SOLUTIONS
www.pflow.com
P 414 352 9000
F 414 352 9002
6720 N. Teutonia Ave.
Milwaukee, WI 53209

Assemble the Gate Panel

1. Place the gate panel face up between the guide tracks on the gate posts.
2. Insert the guide blocks and attach to the gate panel and guide track. See Figure 16-87 and Figure 16-88.

Attach the Gate Panel to the Gate Chains

1. Use an appropriate lifting device to carefully slide the gate panel up towards the gate header. See Figure 16-89.

NOTE *The gate panel should move up without binding on the guide tracks.*

2. Continue to support the gate panel and attach the gate panel to the chains.
3. Connect the #2050 master links to the gate panel and remove the string.
4. Verify the chain length is equal on each side.

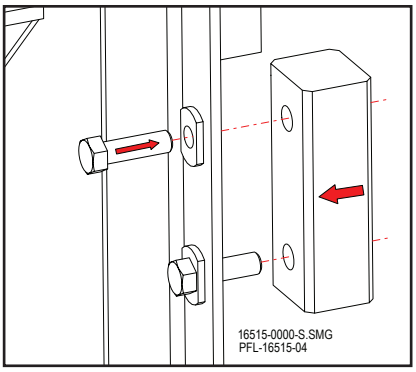

Attach Guide Blocks to Gate Panel
Figure 16-87

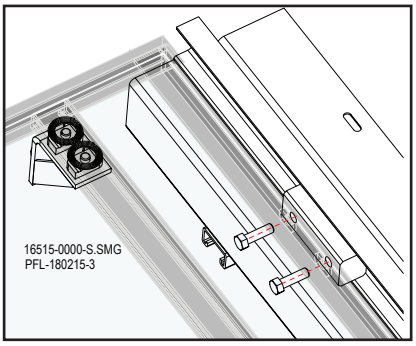

Attach Guide Blocks to Guide Track
Figure 16-88

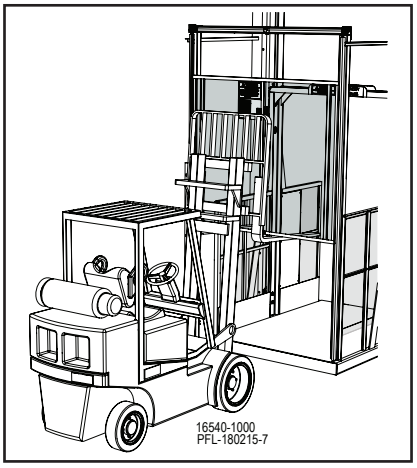

Lift Gate Panel Figure 16-89

PFLOW INDUSTRIES MATERIAL HANDLING SOLUTIONS
www.pflow.com
P 414 352 9000
F 414 352 9002
6720 N. Teutonia Ave.
Milwaukee, WI 53209

Plumb and Square the Gate

1. Plumb and square the gate posts using a plumb bob or a level that is 4' (1219mm) or longer. See Figure 16-90.
2. Snug the gate panel and slide the blocks on one side of the channel guides.
3. Set a +/- 1/8” (3mm) gap between the opposite side guide block and the gate panel. Align the gate post or trim the guide blocks if necessary. The guide block must stay trapped in the guide track. See Figure 16-91.
4. Make sure the gate header is level horizontally and that the gate posts are plumb and square in both directions. Shim and / or adjust as necessary.
5. Verify that the panel travels up and down evenly and is not binding on the guide tracks.

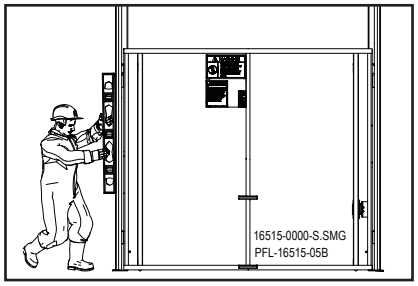

Plumb the Gate Figure 16-90

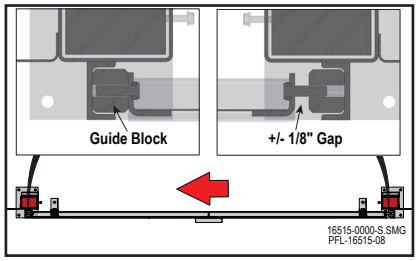

Guide Block Gap 16-91

Weld the Gate Posts

1. Weld the bottom of the gate posts to the carriage deck.
2. Weld the ends of the carriage panel or rails to the gate posts.

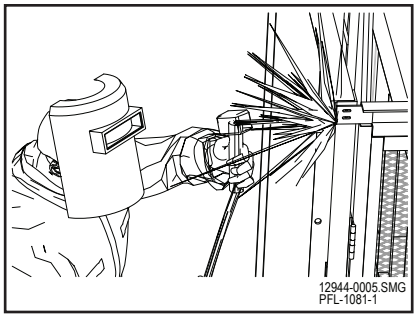

Weld Gate Header to Gate Posts Figure 16-92

Install Support Braces

1. Measure from the gate post to the carriage upright.
2. Cut two (2) 1-1/2" x 1-1/2" (38mm x 38mm)steel angle support braces and weld to each gate post and to the carriage uprights.
3. Remove the temporary bracing.
4. Tighten all bolts.
5. Confirm that the gate is plumb and square.
6. Weld the gate header to the gate posts. See Figure 16-92.
7. Slowly slide the panel down until the chains are tight and the counterweights are off the shipping screws.
8. Remove the counterweight shipping screw.

MATERIAL HANDLING SOLUTIONS
www.pflow.com
P 414 352 9000
F 414 352 9002
6720 N. Teutonia Ave.
Milwaukee, WI 53209

Attach the Bumpers

1. Attach the panel magnetic foot to the bottom of the panel. See Figure 16-93.
2. Attach the panel bumper brackets to the top of the gate panel. See Figure 16-94.

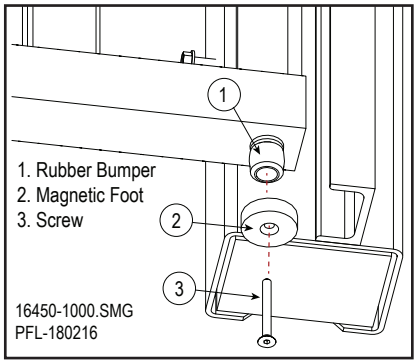

Attach Panel Magnetic Foot Figure 16-93

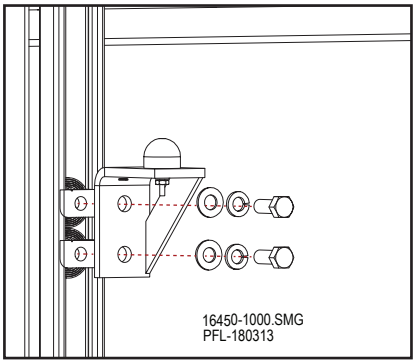

Attach Top Bumper Brackets Figure 16-94

⚠ WARNING

The gate panel must float freely within the guide track or the panel interlock will not operate safely. Make sure the gate is fit properly.

Adjust the Gate Panel

Guide block fit up is important for the gate panel to operate properly and safely. This over-rides any other horizontal alignment dimensions.

1. Verify that the gate panel travels up and down evenly from the top to the bottom of the posts and is not binding on the guide tracks.
2. Adjust the bumpers as necessary.
3. Verify that the gate panel clears the fully open height. If the counterweight bottoms out in the gate post before the gate panel is fully open, remove chain links to shorten the chain length.
4. Lift the gate panel approximately 2' (610mm) off the floor to verify that the gate panel is properly counterbalanced with panel accessories (e.g., cams, interlock flats) on the panel. The gate panel should remain in this position.
   - If the gate continues to rise, add steel bar stock to the inside bottom center of the gate panel frame.
   - If the gate drops, contact PFlow Industries, Inc. Product Support Department for instructions.
5. Verify that the counterweight is not hitting the post base plate.

PFLOW INDUSTRIES MATERIAL HANDLING SOLUTIONS
www.pflow.com
P 414 352 9000
F 414 352 9002
6720 N. Teutonia Ave.
Milwaukee, WI 53209

NOTE

The drop cord is supplied by PFlow Industries, Inc. The wires from the junction box on the carriage to the switch on the gate post is not supplied by PFlow Industries, Inc.

Install the Gate Limit Switch and Stationary Junction Boxes

1. Attach the gate limit switch and bracket to the unistrut mounted on the gate post. See Figure 16-95.
2. Mount the ***carriage mounted junction box*** on the outside of the carriage making sure there are no obstructions above the junction box.
3. On a two-level VRC, mount the ***stationary junction box*** on the same side of the VRC as the carriage mounted junction box. Mount the stationary junction box on the outside of the floor to beam bracing.
4. On a multiple level VRC, mount the ***stationary junction box*** on the same side of the VRC as the carriage mounted junction box. Mount the stationary junction box approximately 8' (2438mm) above the halfway point of the vertical travel of the VRC.

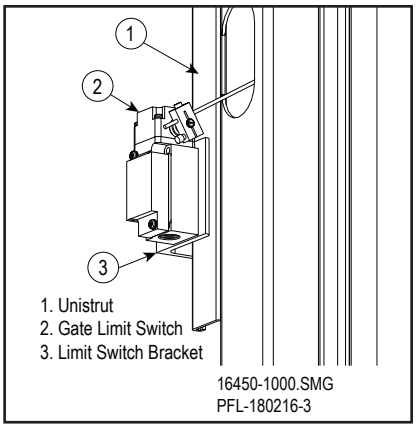

Attach Gate Limit Switch
Figure 16-95

Verify the Gate Operation

1. Verify that the gate panel opens when the carriage is present and does not open when the carriage is not present.
2. Verify that the gate panel remains locked when the carriage leaves the floor level.

PFLOW INDUSTRIES MATERIAL HANDLING SOLUTIONS

www.pflow.com
P 414 352 9000
F 414 352 9002
6720 N. Teutonia Ave.
Milwaukee, WI 53209

Before You Begin

Read this entire manual.

Before starting the installation, verify the job site dimensions and the dimensions of the delivered materials against the PFlow Industries, Inc. General Arrangement (GA) drawing. If the site conditions or the delivered materials do not match the GA drawing, please consult the PFlow Industries, Inc. Product Support Department.

⚠WARNING

- Falling equipment hazard! The installation, maintenance, or servicing of this equipment requires qualified personnel with extensive knowledge and experience on how to rig, erect, and support structural steel.
- Lockout/tagout equipment before performing any adjustments or maintenance. If the equipment is not locked out, it could start unexpectedly and cause injury or damage. ***Make sure all personnel are aware of the potential for stored energy to be present even after the power has been locked out.*** Refer to ANSI Z244.1 and OSHA 29 CFR 1910.147 for minimum requirements for a lockout/tagout system. There may be additional state or local requirements.
- Close all gates before the carriage is moved. Never leave the lift unattended with the gates in the open position. Never close gates when a person is on the carriage or within the fenced area.
- Ensure the gate is, and remains, secured to prevent unsafe use of the gate. Always lock the gate panel closed if the gate area is unattended.

NOTICE

ASME B20.1-2015 defines a qualified person as a person who, by possession of a recognized degree or certificate of professional standing, or by extensive knowledge, training, and experience, has successfully demonstrated his/her ability to solve problems relating to the subject matter and work.

PFLOW INDUSTRIES MATERIAL HANDLING SOLUTIONS
www.pflow.com
P 414 352 9000
F 414 352 9002
6720 N. Teutonia Ave.
Milwaukee, WI 53209

The Purpose of the Gate Cable Interlock

The electromechanical interlock is a safety device used to mechanically prevent the gate from opening. When the carriage is at that level and the gate is open, the VRC should not operate. Replacement components are only available as shown on the next few pages. Some configurations may vary by application. One of four (4) different manufacturer's components may be used for this installation. See Figure 17-1.

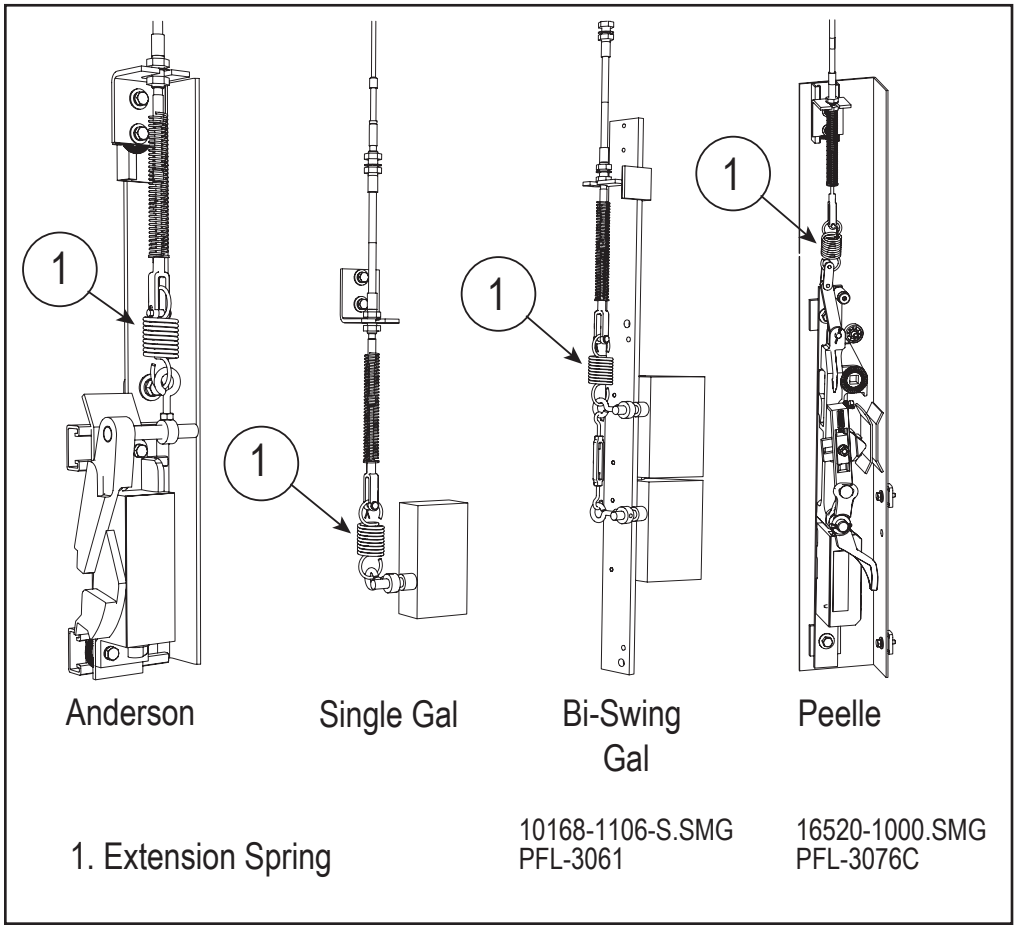

Cable Interlocks Figure 17-1

PFLOW INDUSTRIES MATERIAL HANDLING SOLUTIONS
www.pflow.com
P 414 352 9000
F 414 352 9002
6720 N. Teutonia Ave.
Milwaukee, WI 53209

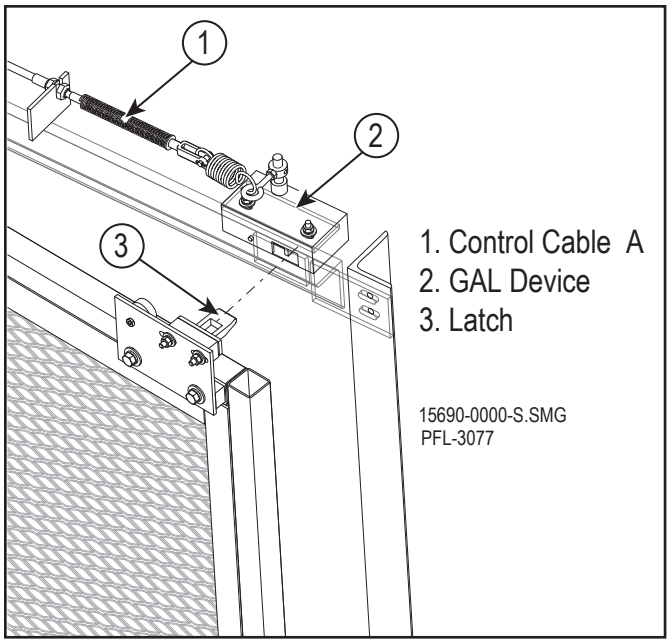

GAL Interlock on Single Panel Swing Gate
Figure 17-2

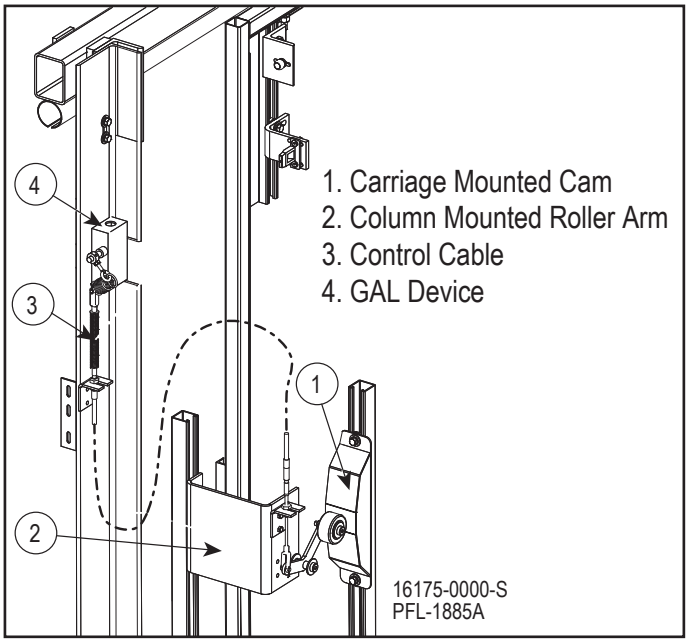

GAL Interlock on Sliding Gate
Figure 17-3

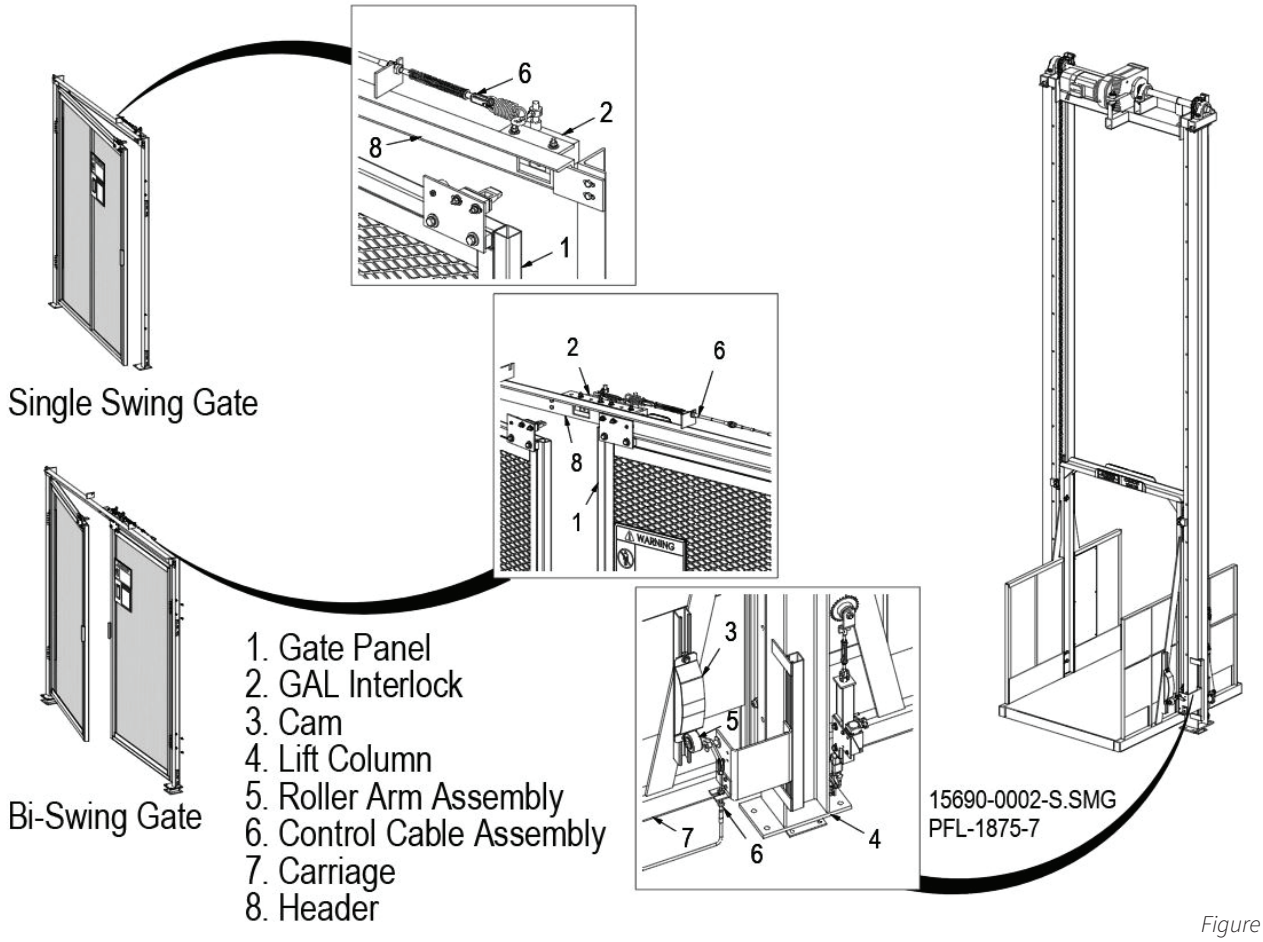

Figure 17-4

PFLOW INDUSTRIES MATERIAL HANDLING SOLUTIONS
www.pflow.com
P 414 352 9000
F 414 352 9002
6720 N. Teutonia Ave.
Milwaukee, WI 53209

General Descriptions

The cable interlock consists of four (4) main items:

- Carriage Cam
- Column Mounted Roller Assembly
- Control Cable
- Gate Cable Interlock Assembly

Carriage Cam

The carriage cam is mounted on the carriage and positioned to activate the roller assembly. The roller must move freely on the inclined face of the carriage cam and allow the control cable to activate the interlock. See Figure 17-5.

Column Mounted Roller Assembly

The roller assembly is mounted on the VRC column. The roller assembly must be positioned to allow the roller to make contact with the carriage cam. See Figure 17-5.

Control Cable

The control cable is a utility cable with threaded stainless steel end rods. The cable has a maximum 2" (51mm) travel. When the control cable is pulled by the roller assembly as it moves along the carriage cam, the interlock locking arm opens. When the control cable is pushed by the roller assembly as it moves along the carriage cam, the interlock locking arm locks into position. See Figure 17-6.

Gate Cable Interlock Assembly

The gate cable interlock assembly is attached to the gate post. The travel of the cable is adjusted to permit the interlock to release the gate latch.

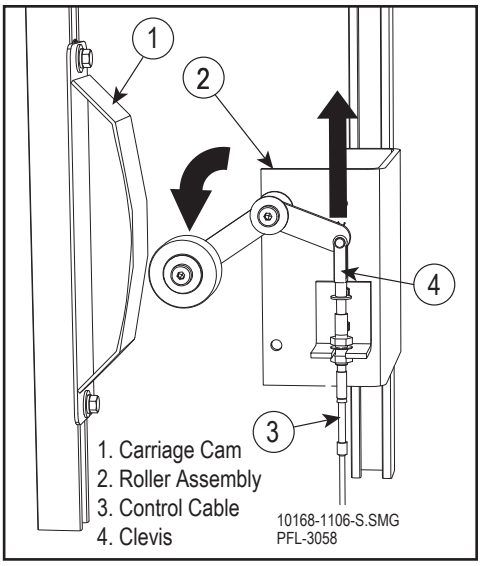

Roller Assembly Position Figure 17-5

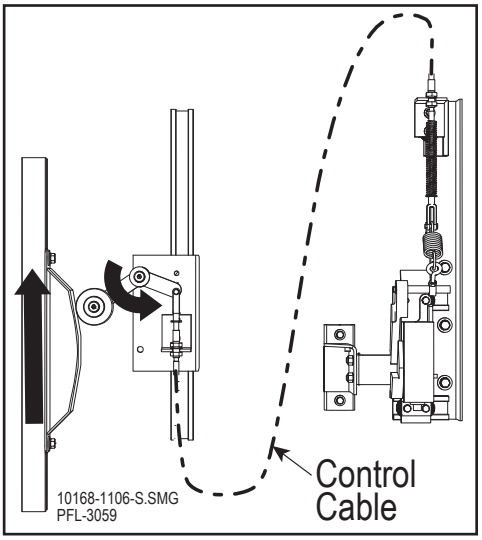

Control Cable Position Figure 17-6

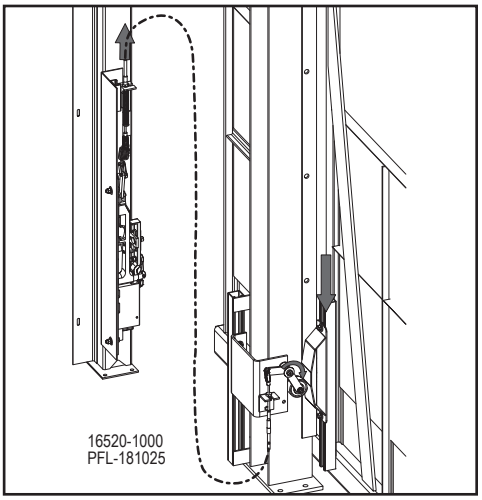

Peelle Interlock Figure 17-7

PFLOW INDUSTRIES MATERIAL HANDLING SOLUTIONS
www.pflow.com
P 414 352 9000
F 414 352 9002
6720 N. Teutonia Ave.
Milwaukee, WI 53209

Peelle Terms

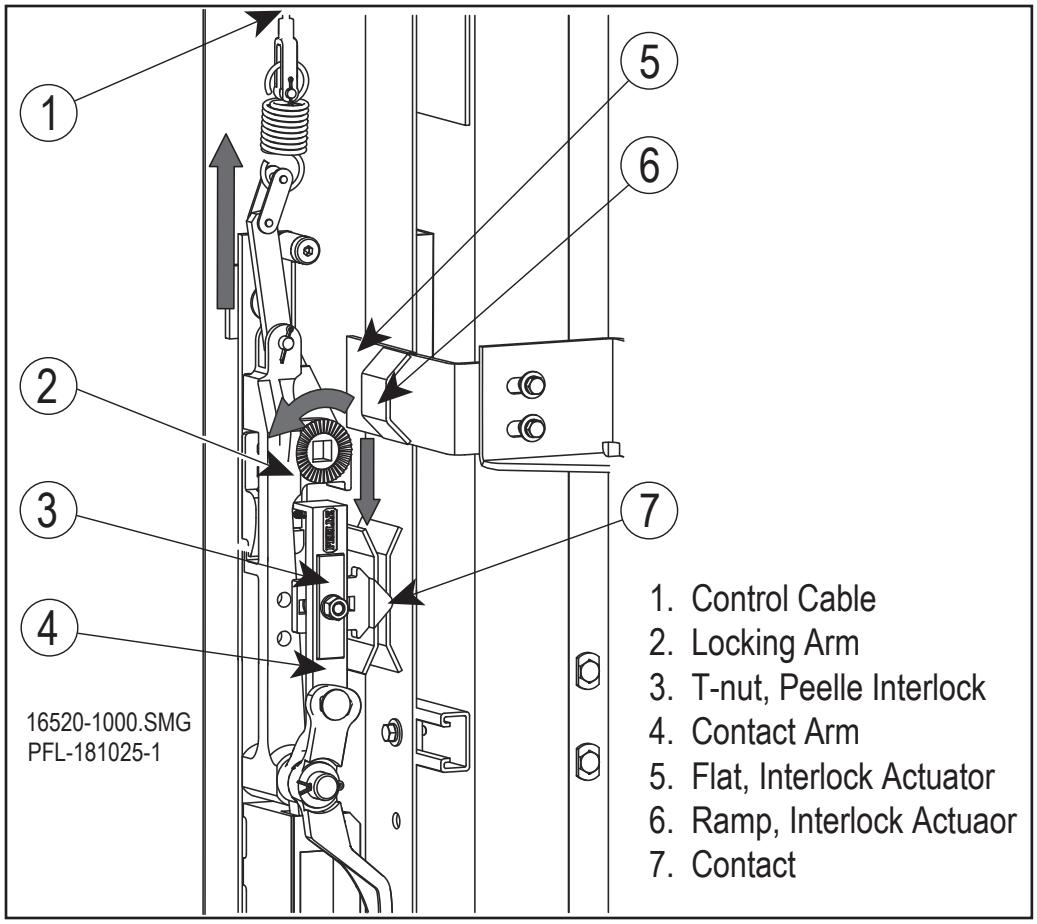

Peelle Interlock Open Position Figure 17-8

The Peelle interlock contact arm assembly and locking arm assembly operate and move independently from each other. See Figure 17-8.

The locking arm assembly captures the gate panel interlock actuator flat to mechanically lock the gate panel closed. See Figure 17-9.

The contact arm assembly is moved by the gate panel interlock actuator to open or close the interlock electrical contacts.

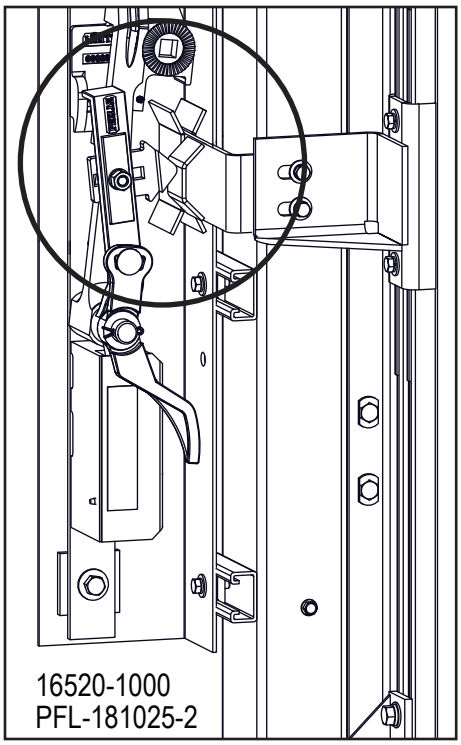

Peelle Interlock Closed Position Figure 17-9

PFLOW INDUSTRIES MATERIAL HANDLING SOLUTIONS
www.pflow.com
P 414 352 9000
F 414 352 9002
6720 N. Teutonia Ave.
Milwaukee, WI 53209

DANGER

- Control cables are designed to be non-repairable. If the control cable is damaged or worn out, the interlock may not operate properly. These issues could prevent the interlock from engaging and allow the gate panel to stay open while the VRC is moving from one level to another.
- The control cable has a minimum bend radius of 6" (152mm). The control cable may not operate properly if the control cable is bent sharper than the 6" (152mm) radius. This could prevent the interlock from engaging and allow the gate panel to stay open while the VRC is moving from one level to another.

WARNING

- If the control cable is damaged or worn out, the interlock may not operate properly.
  - — Protect the control cables from physical damage (kinking, vibration, sharp bends. Maintain a minimum bend radius of 12" (305mm). Do not extend cable travel beyond 2" (51mm).
  - — Route excess gate interlock cables as straight as possible and do not spool in coils tighter than 28" (711mm).
  - — Protect the control cables from chemical damage (paint, solvents, oils, water or ice, dirt, other contaminants.)
  - — Replace worn or damaged control cables. Do not attempt to lubricate or repair. Signs of wear include frayed ends, sudden decrease in usable travel, and moisture in the control cable.

MATERIAL HANDLING SOLUTIONS
www.pflow.com
P 414 352 9000
F 414 352 9002
6720 N. Teutonia Ave.
Milwaukee, WI 53209

Straddle Placement

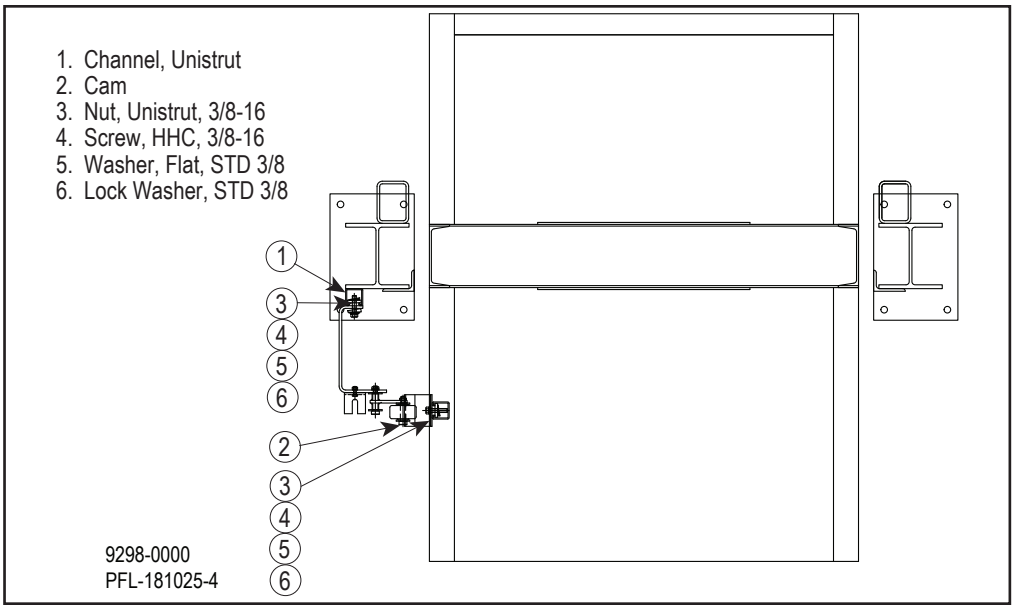

Straddle Placement Figure 17-10

Cantilever Placement

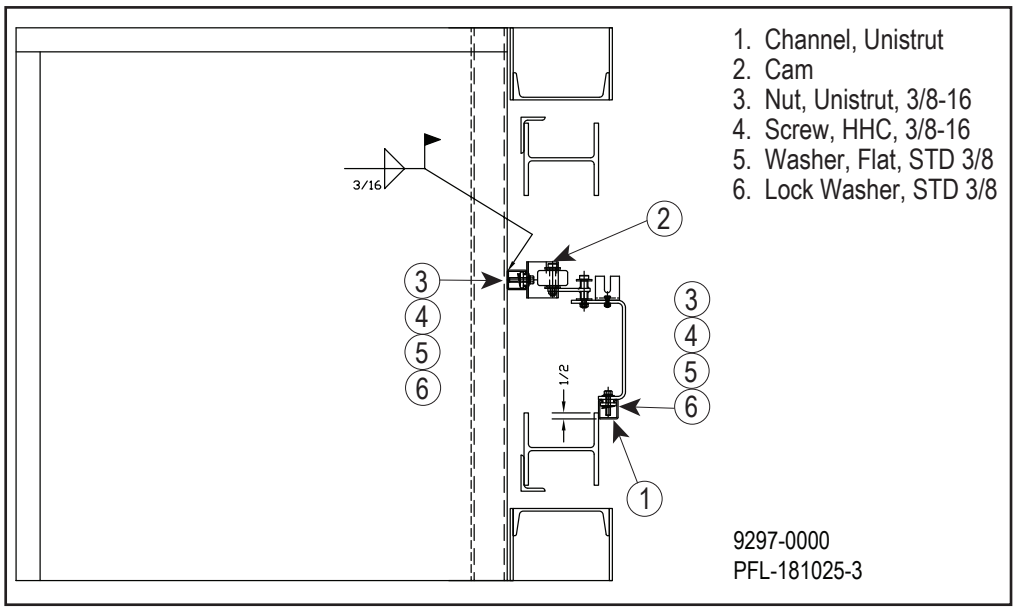

Cantilever Placement Figure 17-11

PFLOW INDUSTRIES MATERIAL HANDLING SOLUTIONS
www.pflow.com
P 414 352 9000
F 414 352 9002
6720 N. Teutonia Ave.
Milwaukee, WI 53209

Adjust the Interlock Assembly

The tension on the extension spring should be adjusted by positioning the cable on the angle bracket. The activation of the interlock is also adjusted by the position on the set collar. See Figure 17-12.

Adjust the Cam and Cable

1. Adjust the carriage cam to allow +/- ¾" cable travel [2" (51mm) maximum cable travel].
2. Make sure the roller wheel clears the edge of the cam.
3. Center the cable travel by positioning the cable in the bracket angle. See Figure 17-13.
4. The edge of the cam must not be past the center of the wheel toward the bracket. This could catch the wheel at the cam edge and break the cable clevis. See Figure 17-14.

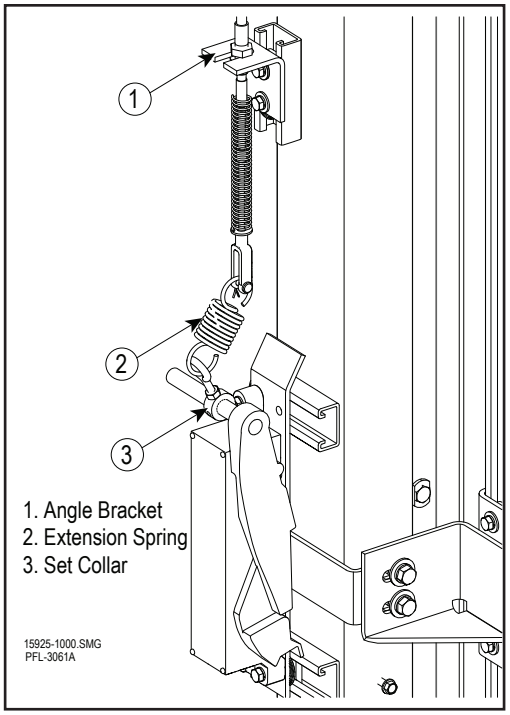

Control Cable Position Figure 17-12

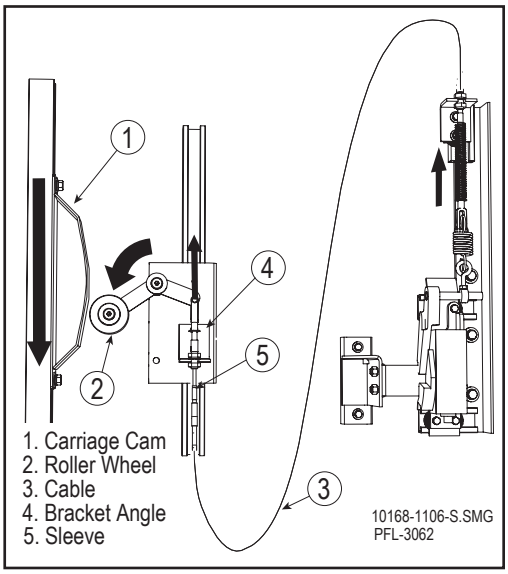

Adjust Roller Wheel (Anderson Shown) Figure 17-13

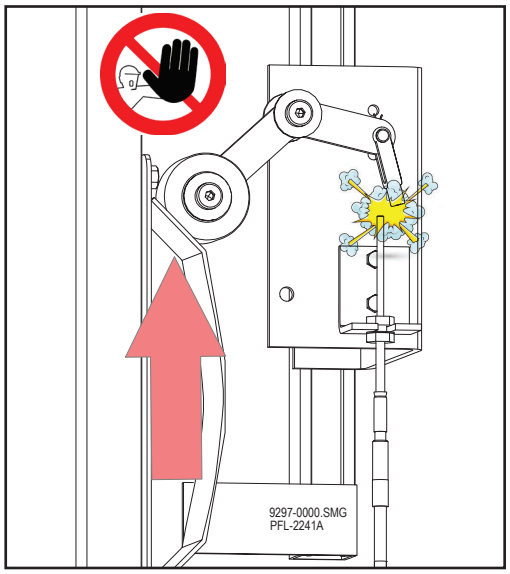

Watch Position of Roller Wheel (Anderson Shown) Figure 17-14

⚠WARNING

Falling hazard! Proper engagement of the roller and cam is critical. Properly align the safety components to avoid causing the roller arm to push the cable into the sleeve, bend, break, and becoming inoperable.

MATERIAL HANDLING SOLUTIONS
www.pflow.com
P 414 352 9000
F 414 352 9002
6720 N. Teutonia Ave.
Milwaukee, WI 53209

Position the Roller Arm on the VRC Column

1. The position of the roller on the cam is very important. The roller must roll freely on the cam incline. See Figure 17-15 and Figure 17-16.

NOTICE Do not allow the roller to hang up on the top or bottom horizontal surface of the cam.

2. At the top and bottom levels, the roller arm assembly should be orientated to allow the cam to hit the roller wheel arm in the pivot direction. See Figure 17-15.
3. If the roller assembly position needs to change to an opposite hand, unbolt the angle and pivot arm and reassemble in the new location. See Figure 17-16.

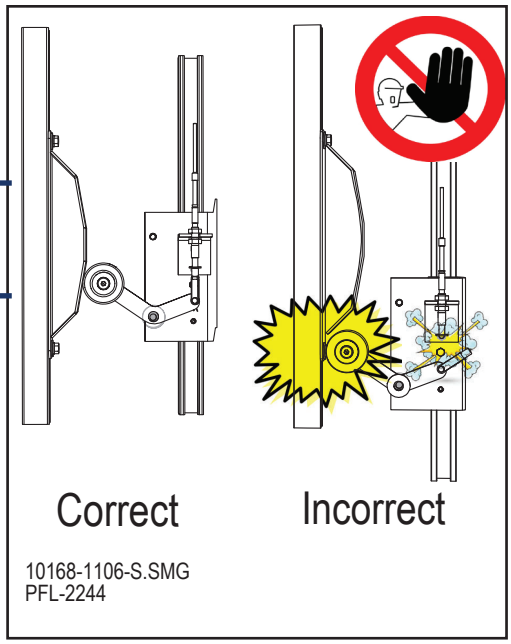

Roller Position Figure 17-15

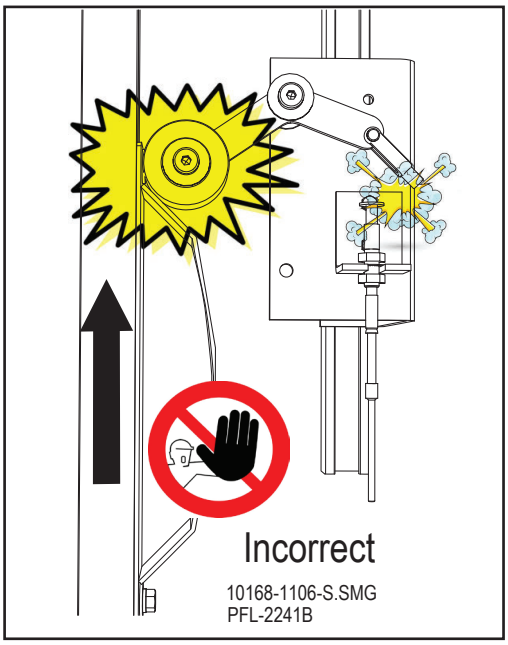

Roller Position Figure 17-16

PFLOW INDUSTRIES MATERIAL HANDLING SOLUTIONS
www.pflow.com
P 414 352 9000
F 414 352 9002
6720 N. Teutonia Ave.
Milwaukee, WI 53209

Position the Roller Arm on the VRC Column (continued)

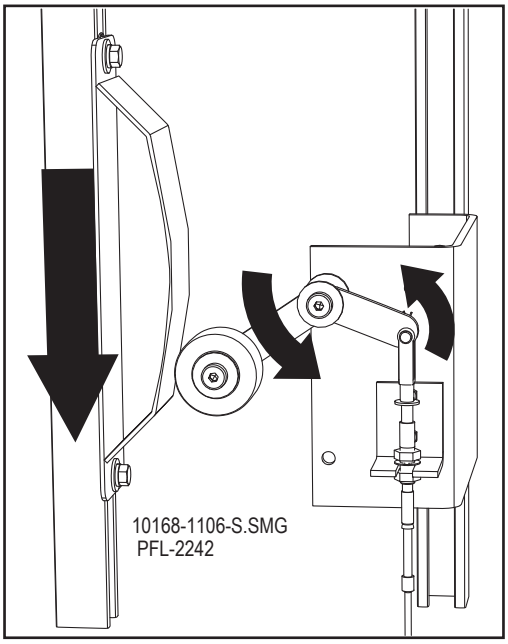

Roller Position Figure 17-17

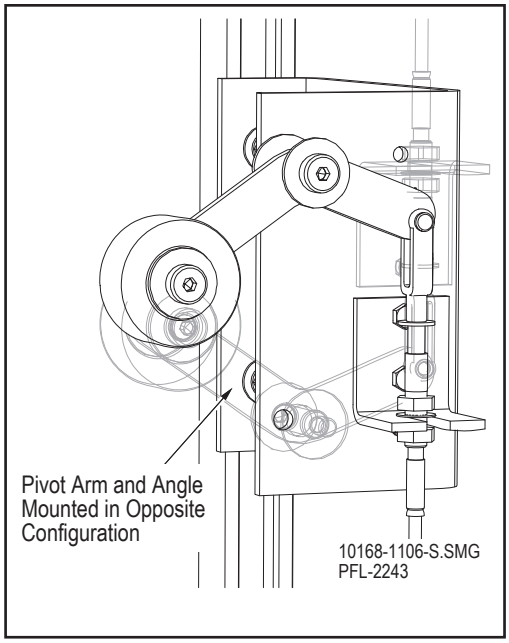

Roller Position Figure 17-18

NOTICE Alignment is important. The cam will contact the roller arm in both directions on intermediate levels.

4. The edge of the cam must pass the center of the wheel (away from bracket) to allow pivot arm to rotate. See Figure 17-17.
5. If the cam hits under the wheel and does not allow the arm to pivot, the cable will break. See Figure 17-19.

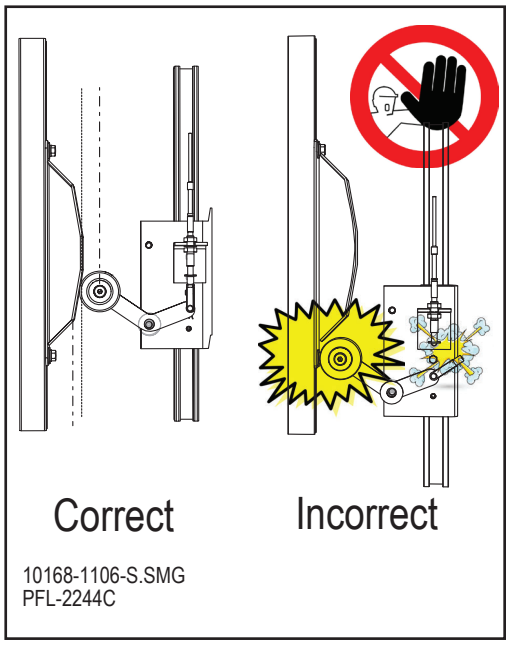

Roller Position Figure 17-19

MATERIAL HANDLING SOLUTIONS
www.pflow.com
P 414 352 9000
F 414 352 9002
6720 N. Teutonia Ave.
Milwaukee, WI 53209

Wire the Electrical Switches

See the job specific wiring schematic for proper wiring instructions.

A gate status switch is supplied when the contacts are not being used. If required, the switch will be mounted to the gate post or header. Normally, the GAL and Anderson interlocks do not use this switch. Specific order requirements may dictate otherwise.

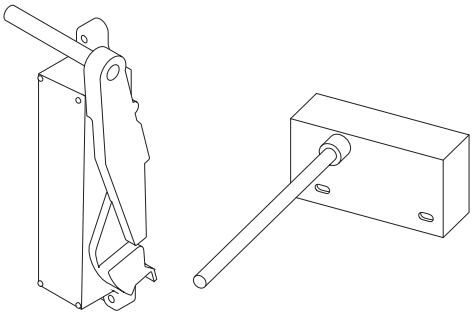

Anderson
11949-0000.SMG
PFL-170711-1

GAL
13658-0000.SMG
PFL-170711-2

Figure 17-20

MATERIAL HANDLING SOLUTIONS

www.pflow.com
P 414 352 9000
F 414 352 9002
6720 N. Teutonia Ave.
Milwaukee, WI 53209

PFLOW INDUSTRIES MATERIAL HANDLING SOLUTIONS
www.pflow.com
P 414 352 9000
F 414 352 9002
6720 N. Teutonia Ave.
Milwaukee, WI 53209

Before You Begin

Read this entire manual. Before starting the installation, verify the job site dimensions and the dimensions of the delivered materials against the PFlow Industries, Inc. General Arrangement (GA) drawing. If the site conditions or the delivered materials do not match the GA drawing, please consult the PFlow Industries, Inc. Product Support Department.

⚠WARNING

Falling panel hazard! The installation of this equipment requires a qualified installer with extensive knowledge and experience on how to rig, erect, and support structural steel. Be sure to properly support, tie off, or temporarily brace the enclosure panels during installation. Do not depend on the enclosure panel feet to support the enclosure panel while the enclosure panel is being positioned or assembled. Final bracing of the enclosure panels must be to the Vertical Reciprocating Conveyor (VRC) or building structure and able to withstand a minimum of 200 pounds of force applied laterally. The use of structural angle is recommended.

⚠CAUTION

Lifting hazard! Components and accessories are heavy. To prevent serious personal injury, use the appropriate lifting apparatus, tie offs, or help when moving, lifting or assembling the components or accessories.

Enclosure Panels

In accordance with ASME B20.1-2015, Section I-3.9, PFlow Industries, Inc. supplies standard 8' (2438mm) tall enclosure panels to be installed around the Vertical Reciprocating Conveyor (VRC) as required by site conditions. The enclosure panels are steel with 1-1/2" (38mm) angle frame and 16 gauge flattened expanded metal designed to reject a ball 2" (51mm) in diameter.

The PFlow Industries, Inc. GA drawing provides a “Plan View” for each level. Proper placement and appropriate size for layout and installation purposes is shown. See Figure 18-1.

Full Height Enclosures

Applications that require full height enclosures (FHE) will have an additional drawing in the shipping packet.

NOTE *When stacking panels, as in full height applications or a transom above a gate, panels without legs are placed above the regular panels.*

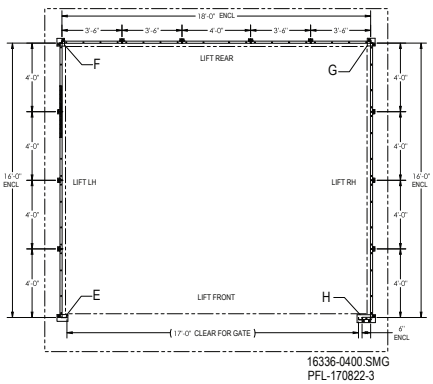

GA “Plan View” Sample Figure 18-1

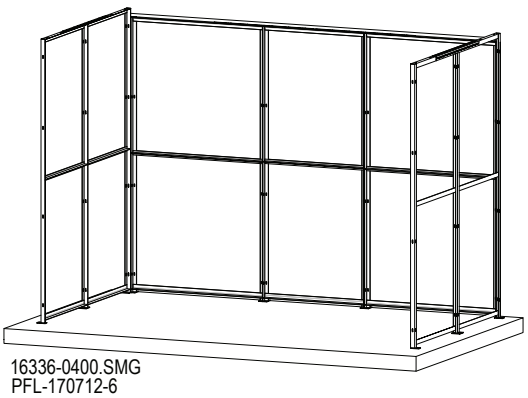

Enclosure Sample Figure 18-2

PFLOW INDUSTRIES MATERIAL HANDLING SOLUTIONS
www.pflow.com
P 414 352 9000
F 414 352 9002
6720 N. Teutonia Ave.
Milwaukee, WI 53209

Identify Components

Enclosure panels have color coded tags. Each tag is a different color.

Level	Tag Color
1st (bottom)	Green
2nd	Yellow
3rd	Red
4th	Blue
Other	Cream

Inventory Enclosure Panels

Before beginning the installation of the enclosure panels, take an inventory of the enclosure panels to make sure the correct number and sizes have been received.

The method of assembly of the enclosure panels will vary due to site conditions. See Figure 18-3 for the general sequence of events.

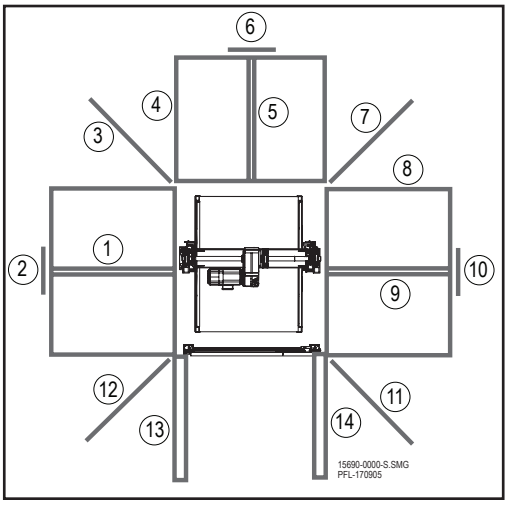

Enclosure Panel Sequence Figure 18-3

Assemble and Install Enclosure Panels

1. Bolt together two (2) enclosure panels. See Figure 18-4.
2. Bolt stiffener on top of the two (2) enclosure panels. See Figure 18-5.
3. Bolt corner angle to the enclosure panel for 90° corners. See Figure 18-6.

NOTICE Wall attachment kits are provided when a gate or panel meets an existing wall. See Figure 18-9.

4. Bolt filler panels (if applicable) to the enclosure panel to fill a gap of less than 6" (152mm). See Figure 18-7 on the next page.
5. Bolt attachment tabs to join the full height enclosure panels or stacked enclosure panels.
6. Drill and anchor the enclosure panel feet to the floor with 3/8" anchors, 3-1/2" (89mm) long. See Figure 18-4.

NOTICE The anchor hole depth should always be deeper than the length of the anchor bolt. The recommended wedge anchor size is 3/8" diameter by 3-1/2" (89mm) long.

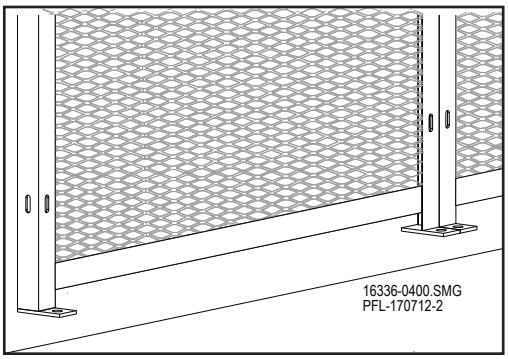

Enclosure Panels Figure 18-4

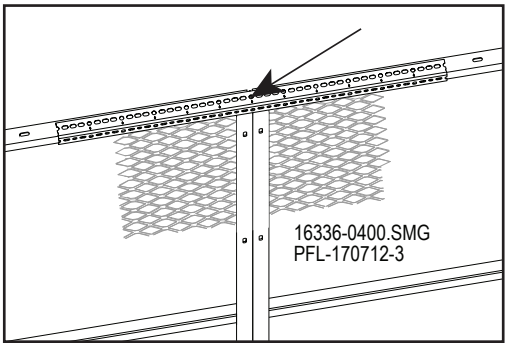

Enclosure Panel Stiffener Figure 18-5

MATERIAL HANDLING SOLUTIONS
www.pflow.com
P 414 352 9000
F 414 352 9002
6720 N. Teutonia Ave.
Milwaukee, WI 53209

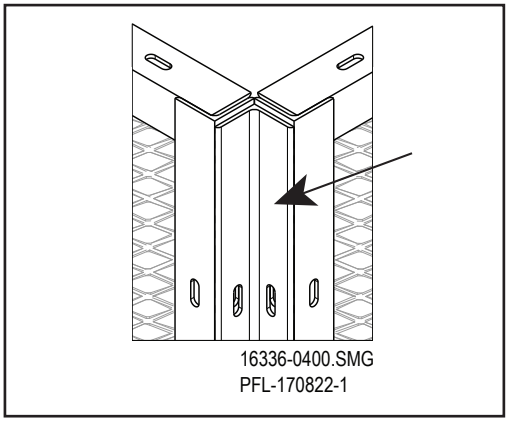

Corner Angle Figure 18-6

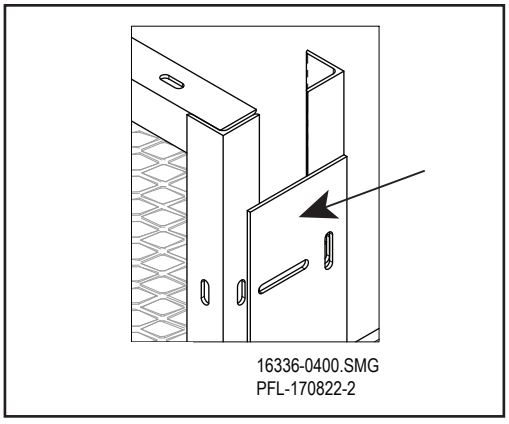

Filler Panel Figure 18-7

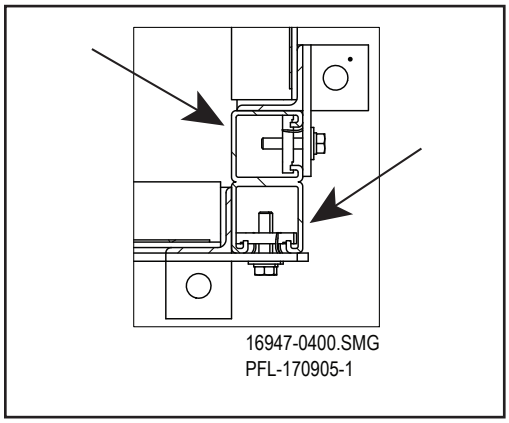

Unistrut Attachment Figure 18-8

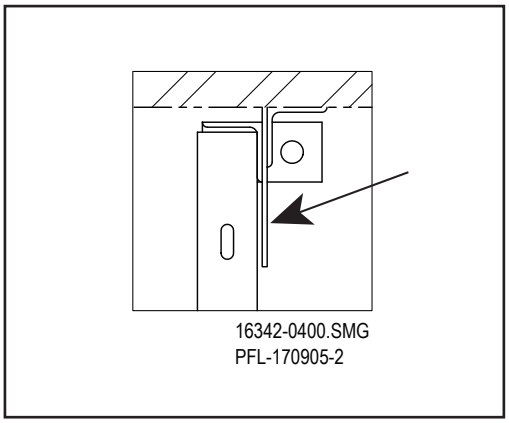

Wall Attachment Figure 18-9

NOTICE Enclosures must be braced to the Vertical Reciprocating Conveyor (VRC) or building structure and able to withstand a minimum of 200 lbf applied laterally in accordance with AMSE B20.1-2015-Section I-3.9. The use of structural angle is recommended. Enclosure panels may need to be notched to permit bracing the VRC.

MATERIAL HANDLING SOLUTIONS

www.pflow.com
P 414 352 9000
F 414 352 9002
6720 N. Teutonia Ave.
Milwaukee, WI 53209

PFLOW INDUSTRIES MATERIAL HANDLING SOLUTIONS
www.pflow.com
P 414 352 9000
F 414 352 9002
6720 N. Teutonia Ave.
Milwaukee, WI 53209

Before You Begin

Read this entire manual.

Purpose

The PFlow Industries, Inc. Vertical Reciprocating Conveyor (VRC) is designed for the movement of materials only, up to the VRC's rated capacity, from one level to the next. Passengers are not allowed. The placement of capacity labels, and safety warnings are the installer's responsibility. Make sure the warning labels are placed on each gate and each push button station.

PFlow Industries, Inc. supplies the appropriate signage in a manilla envelope in the parts crate with the original shipment. Contact PFlow Industries, Inc. Product Support Department for signage if another language is needed.

Large P/N 10651-0000
Small P/N 10655-0000

P/N 16794-0000

P/N 10653-0000

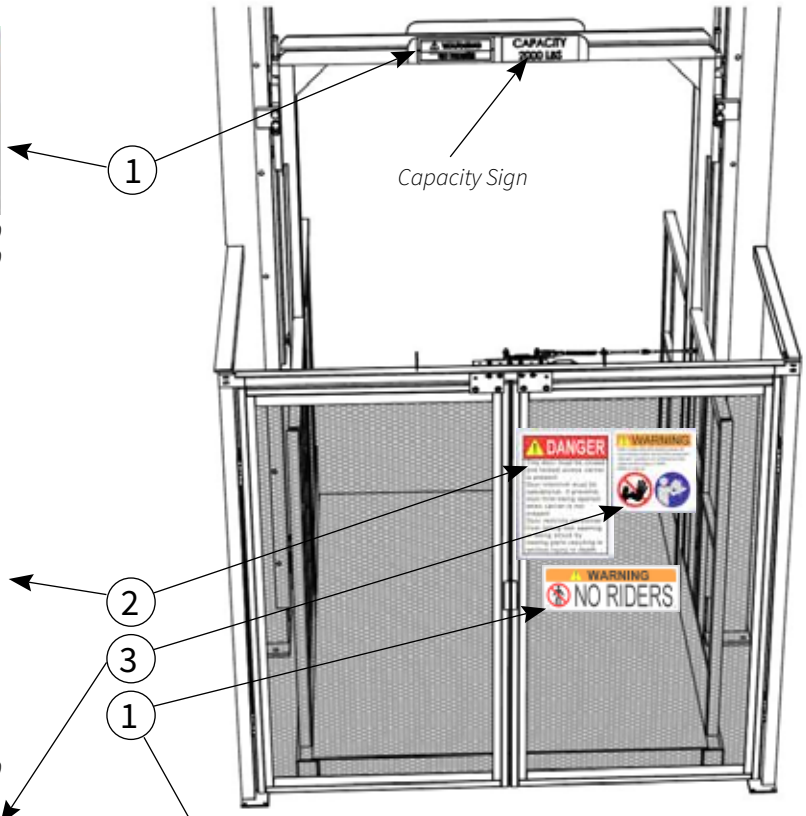

12944-0005.SMG
PFL-1081-2

PFLOW INDUSTRIES
MATERIAL HANDLING SOLUTIONS

www.pflow.com
P 414 352 9000
F 414 352 9002
6720 N. Teutonia Ave.
Milwaukee, WI 53209

PFLOW INDUSTRIES MATERIAL HANDLING SOLUTIONS
www.pflow.com
P 414 352 9000
F 414 352 9002
6720 N. Teutonia Ave.
Milwaukee, WI 53209

Before You Begin

Read this entire manual.

Install the Gate Post Extensions

Gate post extensions may be required to gain additional gate post height and provide clearance between the bottom of the gate panel and the optional landing platform or ramp. If a landing platform or ramp is provided, the gate panel is positioned above the landing platform or ramp.

The gate post extension allows the gate panel to swing over the top of the landing platform or ramp. See Figure 20-1 and Figure 20-2.

1. Bolt the post extension pad to the bottom of the gate post base plates.
2. Follow the appropriate gate installation instructions.

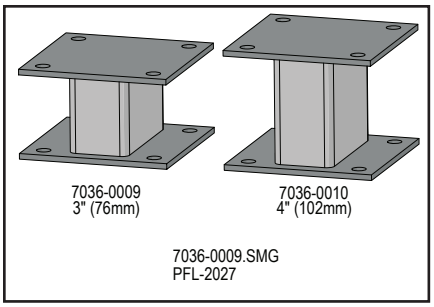

Post Extension Pads Figure 20-1

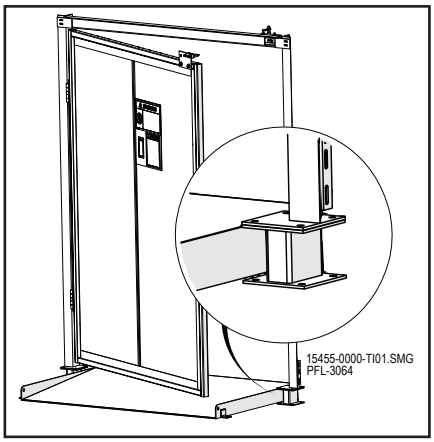

Post Extension Pads and Ramp Figure 20-2

Install the Landing Platform

1. Position the landing platform 1" (25mm) from the carriage and align with the carriage deck.
2. Make sure the anchoring tabs do not interfere with the gate posts.
3. Weld two (2) anchoring tabs onto both the right side and the left side of the landing platform. See Figure 20-3.
4. Anchor the landing platform to the floor.

NOTICE

The anchor hole depth should always be deeper than the length of the anchor bolt. The recommended wedge anchor size is 3/8" diameter by 3-1/2" (89mm) long.

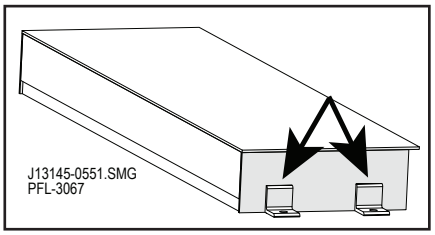

Landing Platform Anchor Tabs Figure 20-3

Install the Ramp

Ramps are typically provided for first floor levels where the floor is not at the same level as the carriage deck.

Allow additional clearance from the carriage to the ramp. Position the high end of the ramp 1" (25mm) from the edge of the carriage.

1. Weld two (2) anchoring tabs onto both the right side and the left side of the ramp. See Figure 20-4.
2. Anchor the ramp to the floor.

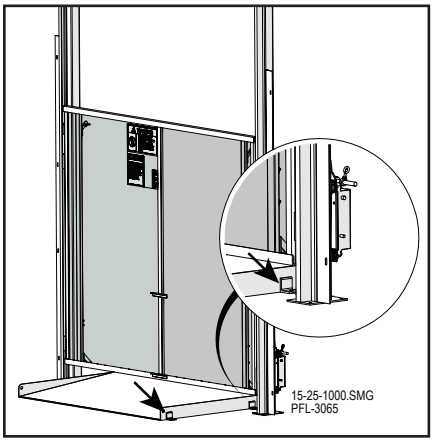

Ramp without Post Extension Pads Figure 20-4

PFLOW INDUSTRIES
MATERIAL HANDLING SOLUTIONS
www.pflow.com
P 414 352 9000
F 414 352 9002
6720 N. Teutonia Ave.
Milwaukee, WI 53209

PFLOW INDUSTRIES MATERIAL HANDLING SOLUTIONS

www.pflow.com
P 414 352 9000
F 414 352 9002
6720 N. Teutonia Ave.
Milwaukee, WI 53209

Before You Begin

Read this entire manual.

Overcurrent Sensor (OCS) Purpose

The PFlow Industries, Inc. Vertical Reciprocating Conveyor (VRC) is equipped with an Overcurrent Sensor (OCS). The OCS is pre wired and located inside the electrical control panel. See Figure 21-1.

The OCS monitors the motor amp draw and provides enhanced over current protection of the lift motor. The OCS must be adjusted to the maximum "expected" current draw. If the motor current rises above the OCS set point, the OCS will trip. Tripping can be caused by a circuit malfunction, overloading the capacity of the lift, or an overhanging load trapped between floors.

Overcurrent Sensor Figure 21-1

Test and Calibrate the OCS

1. Turn the trip point dial to its lowest position.
2. Place the maximum product load on the carriage.

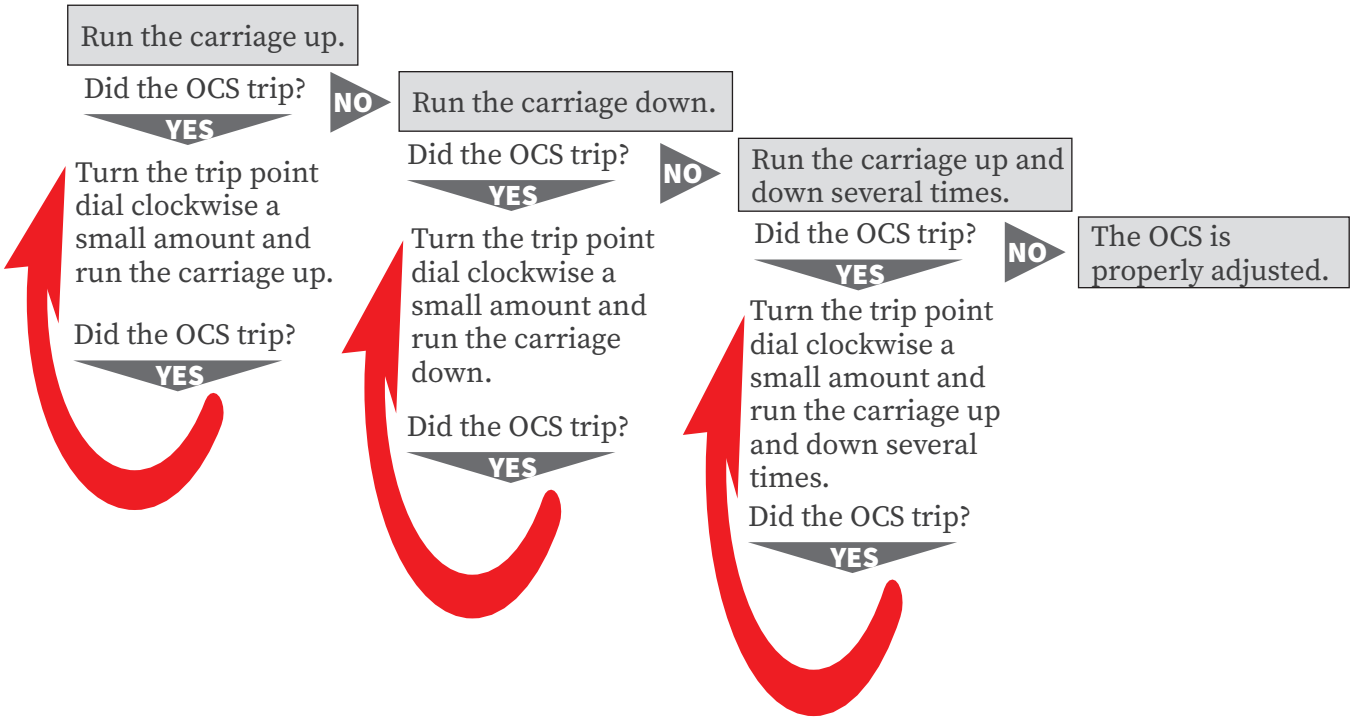

MATERIAL HANDLING SOLUTIONS
www.pflow.com
P 414 352 9000
F 414 352 9002
6720 N. Teutonia Ave.
Milwaukee, WI 53209

PFLOW INDUSTRIES MATERIAL HANDLING SOLUTIONS
www.pflow.com
P 414 352 9000
F 414 352 9002
6720 N. Teutonia Ave.
Milwaukee, WI 53209

Before You Begin

Read this entire manual.

⚠CAUTION

Connect all push-button stations, gate interlocks, limit switches, and accessories before applying power to the drive motor. Never override any electrical component or manually operate the motor starter to operate the Vertical Reciprocating Conveyor (VRC).

The use of temporary power is not recommended for inexperienced installers. When running the VRC before all limit switches are installed, be prepared to disconnect the power. Allowing the carriage to overtravel in either direction may result in serious personal injury and property damage. Contact the PFlow Industries, Inc. Product Support Department immediately concerning any questions.

Start-up Procedures

1. Confirm that all bolts on the VRC are tight.
2. Confirm that all finish welds are complete.

Confirm E-stop Safety Operation

1. While you and the carriage are at the first level, push in the Emergency Stop (E-stop) button on the push-button station.
2. Push the Send to 2 button on the push-button station. The VRC should not move.
3. Pull out the E-stop button on the push-button station.

Confirm Motor Rotation

NOTICE A second person should be next to the disconnect station to immediately disconnect power to the VRC. There's not much reaction time available before the S-hook releases and the chains run off the sprockets.

1. Push the Send to 2 button on the push-button station just long enough to confirm that the carriage begins to rise. Push in the E-stop button on the push-button station.

NOTE

If pushing in the E-stop button on the push-button station does not stop the VRC from moving, immediately disconnect power to the VRC.

If nothing happens when the Send to 2 button is pushed, contact PFlow Industries, Inc. Product Support Department for troubleshooting assistance.

*If the motor is **not** operating in the correct direction, stop the motor immediately. Using established Lockout/Tagout procedures, have a qualified electrician inspect and switch the T1 and T2 wires of the incoming 3-phase power for the motor. Confirm that the motor rotation is correct after any wiring change has been made.*

2. Pull out the E-stop button on the push-button station.

PFLOW INDUSTRIES MATERIAL HANDLING SOLUTIONS
www.pflow.com
P 414 352 9000
F 414 352 9002
6720 N. Teutonia Ave.
Milwaukee, WI 53209

Inspect for Binding

1. Push the Send to 2 button on the push-button station.
2. Raise the carriage in 3' (914mm) increments along the full height of the VRC. Inspect for binding or interference and verify the guide angle to guide angle dimension at each increment.
3. If the wheelblock shoes rub against the column:
   - Verify that wheelblock shoe shims have been installed.
   - Verify that the columns are plumb.
   - Contact PFlow Industries, Inc. Product Support Department for troubleshooting assistance.

Confirm Carriage Stops are Level with the Floor

Make sure the carriage deck stops level with the floor of each level. Adjust the limit switch position if necessary.

Confirm Gate Safety Operation

1. While you are at the first level and the VRC is traveling up, attempt to open the gate door. The door should not open while traveling, and the VRC should continue to travel up.

NOTE *If the VRC stops but the gate door will not open, call PFlow Industries, Inc. Product Support Department for troubleshooting assistance.*

2. While the VRC is at the second level, attempt to open the first level gate door. The gate door should not open.
3. Push the Send to 1 button on the push-button station.
4. Attempt to open the first level gate door. The gate door should not open.
5. Attempt to open the first level gate door when the carriage has reached the first level. The gate door should open.

NOTE *If the gate door does not open, refer to the interlock section of the installation manual for needed adjustments.*

Confirm Push-button Operation

1. Close the gate door. Push in the E-stop button on the push-button station. Push the Send to 1 button on the push-button station. The VRC should not move.
2. Pull out the E-stop button on the push-button station. Push the Send to 2 button on the push-button station. The VRC should begin to travel up.

Repeat the E-stop Safety Operation steps, Gate Safety Operation steps, and the Push-button Operation steps at each level and at each push-button station.

MATERIAL HANDLING SOLUTIONS
www.pflow.com
P 414 352 9000
F 414 352 9002
6720 N. Teutonia Ave.
Milwaukee, WI 53209

Conduct a Load Test

⚠WARNING

Avoid Shifting Loads! Place the load in the center of the lift platform. Make sure that any portion of the load does not overhang the perimeter of the carriage. This could create an unstable load condition.

1. With the carriage deck at the first level, add weight up to, but not to exceed, the VRCs rated capacity.
2. Close the gate and push the Send to 2 button on the push-button station.
3. Monitor the position of the carriage deck as it reaches the second level.
4. Continue to monitor the position of the carriage deck. Allow the VRC to hold the lift at the upper level for a half hour.

NOTE *The motor brake is not holding if the carriage deck drops below the second level. Make a note of the weight used, and the amount of time that the carriage deck held the position before dropping down. Push the send to 1 button and contact PFlow Industries, Inc. Product Support Department for troubleshooting assistance.*

MATERIAL HANDLING SOLUTIONS

www.pflow.com
P 414 352 9000
F 414 352 9002
6720 N. Teutonia Ave.
Milwaukee, WI 53209

PFLOW INDUSTRIES MATERIAL HANDLING SOLUTIONS
www.pflow.com
P 414 352 9000
F 414 352 9002
6720 N. Teutonia Ave.
Milwaukee, WI 53209

Post Installation Checklist

Make sure all steps are completed. Sign and return to PFlow Industries, Inc. Product Support Department via e-mail to psd@pflow.com

√	Verify Mechanical Completion
☐	Final bracing for the VRC is completed from front-to-back and from side-to-side. Inspect each level.
☐	Final bracing for the gates and enclosures are completed. Inspect each level.
☐	The gate door opens when the carriage is present. Inspect each level.
☐	The gate door does not open when the carriage is not present. Inspect each level.
☐	Excess gate interlock cables are routed as straight as possible and not spooled in coils tighter than 28" (711mm).
☐	All operational signs are posted.
☐	All weld marks, scrapes, etc. are touched up with paint.
☐	The setscrew holding the safety cam on the wheelblock has been replaced with a bolt and washers.
☐	The chain tensioner is tested and working properly.
☐	On MQ models, the slack chain sensor is adjusted and tested.
☐	The carriage does not “rock” excessively during travel.
☐	There is no excessive noise or binding during travel.
☐	Additional options and accessories (e.g., DeckLocks, maintenance pins) are tested and working properly.
☐	The installation site is clean and all debris is removed.
☐	The customer received instructions regarding proper lift operation.
☐	The customer received instructions regarding preventive maintenance of the VRC.
☐	The customer received instructions regarding procedures in the event of a problem or safety related issues.
☐	Identify any unsafe condition. Document and report the condition immediately to the customer and then PFlow Industries, Inc. Product Support Department. Do not allow the lift to operate when unsafe conditions arise.

Additional Notes or Follow-up Requirements

PFlow Serial Number	Customer/User	Date
Mechanical Checklist Completed by		E-mail Address
Company		Phone Number

PFLOW INDUSTRIES MATERIAL HANDLING SOLUTIONS
www.pflow.com
P 414 352 9000
F 414 352 9002
6720 N. Teutonia Ave.
Milwaukee, WI 53209

Post Installation Checklist

Make sure all steps are completed. Sign and return to PFlow Industries, Inc. Product Support Department via e-mail to psd@pflow.com

✓	Verify Electrical Completion
☐	Make sure all electrical connections are tight and properly made.
☐	The push-button station operates correctly on all floor levels.
☐	The emergency stop button operates correctly on all floor levels.
☐	The floor level limit switches are adjusted and the carriage stops level at each floor.
☐	The overtravel limit switch is adjusted and the carriage stops before reaching the drivebase assembly.
☐	The OCS has been adjusted and the full load test is completed.
☐	The gate door opens when the carriage is present. Inspect each level.
☐	The gate door does not open when the carriage is not present. Inspect each level.
☐	The VRC does not operate with any gate open.
☐	Additional options and accessories (e.g., DeckLocks, maintenance pins) are tested and working properly.
☐	The installation site is clean and all debris is removed.
☐	The customer received instructions regarding electrical control panel location and power shutoffs.
☐	The customer received instructions regarding procedures in the event of a problem or safety related issues.
☐	Identify any unsafe condition. Document and report the condition immediately to the customer and then PFlow Industries, Inc. Product Support Department. Do not allow the lift to operate when unsafe conditions arise.

Additional Notes or Follow-up Requirements

PFlow Serial Number	Customer/User	Date
Electrical Checklist Completed by		E-mail Address
Company		Phone Number

Section 24 | Installation Questionnaire

PFLOW INDUSTRIES MATERIAL HANDLING SOLUTIONS

www.pflow.com
P 414 352 9000
F 414 352 9002
6720 N. Teutonia Ave.
Milwaukee, WI 53209

Thank You

PFlow Industries, Inc. would like to thank you for the opportunity to serve you. Your business is appreciated. Please help us to ensure that your expectations are met by taking a few minutes to tell us about the equipment and service that you have received. Complete the Installation Questionnaire and Acceptance Certificate. Return both forms to PFlow Industries, Inc. via e-mail to psd@pflow.com Additional space for comments is available on the next page.

	Yes ✓	No ✓
Product Perception		
Was the equipment shipment complete as expected?	☐	☐
What items were missing, if any?		
Was the equipment in good condition?	☐	☐
Describe the equipment damage or concerns with the workmanship, if any.		
Did the equipment match the General Arrangement (GA) drawing?	☐	☐
Was the equipment dimensionally correct with form, fit, and function?	☐	☐
Describe any problem areas in detail.		
Electrical Installation		
Was the electrical field wiring completed as required?	☐	☐
Were there any issues with the electrical components?	☐	☐
After the electrical installation was completed, was it necessary to return for final adjustments, testing, and training?	☐	☐
Were you made aware of any electrical problems?	☐	☐
Describe any “No” answers areas in detail.		
Testing		
Was the equipment tested at full load capacity?	☐	☐
Were all gates tested to ensure proper operation and interlock operation?	☐	☐

PFlow Serial Number	Customer/User	Date
Questionnaire Completed by	E-mail Address	
Company	Phone Number	

MATERIAL HANDLING SOLUTIONS

www.pflow.com
P 414 352 9000
F 414 352 9002
6720 N. Teutonia Ave.
Milwaukee, WI 53209

PFLOW INDUSTRIES MATERIAL HANDLING SOLUTIONS
www.pflow.com
P 414 352 9000
F 414 352 9002
6720 N. Teutonia Ave.
Milwaukee, WI 53209

Acceptance

We, the Customer, accept the equipment listed below as being properly installed, tested, and performing to our satisfaction. For the purpose of quality assurance by PFlow Industries, Inc., this form covers both the mechanical and the electrical installation of the equipment. This acceptance in no way releases either PFlow Industries, Inc. or the installing contractor(s) of any warranty obligations. If there are any exceptions or unresolved items, please include detailed information.

PFlow Serial Number:	Model Number:	☐ B	☐ D	☐ DB	☐ F	☐ M	☐ MQ	☐ 21	☐ CV	Other _____
Job Name:										
Site Street Address:										
Site Mailing Address:										
Site City:							State:		Zip Code:	
Customer Contact Name:							Contact Title:			
Customer Contact Phone: ( ) Ext							E-Mail:			

Tests Performed					
	Load Capacity:				Start-up Date:
	Load Test:	☐ Yes	☐ No	at ____ % of lift capacity	Customer Initials:
	Operation Test:	☐ Yes	☐ No		Comments:
	Gate/Interlock Operation:	☐ Yes	☐ No	☐ Not Applicable	
	Other Test:				
	Other Test:				

Personnel Instructed on the Operation and Preventive Maintenance:	
Name:	Company:
Name:	Company:

Accepted by:	Acceptance Date:
Name/Phone:	PFlow Rep Present:
Title:	Name:
Company:	Company:

Please return a copy of this form to the PFlow Industries, Inc. Product Support Department.

PFLOW INDUSTRIES
MATERIAL HANDLING SOLUTIONS
www.pflow.com
P 414 352 9000
F 414 352 9002
6720 N. Teutonia Ave.
Milwaukee, WI 53209