103-0010_rev04_09_rev1:Layout 1 2/9/11 11:23 AM Page 1

Manual No. 103-0010
REV. 04/09 (Rev. 1)

SPANCO® Inc.
Promise to perform.

Installation and Maintenance Manual for SPANCO® Ceiling Mounted Workstation Bridge Cranes

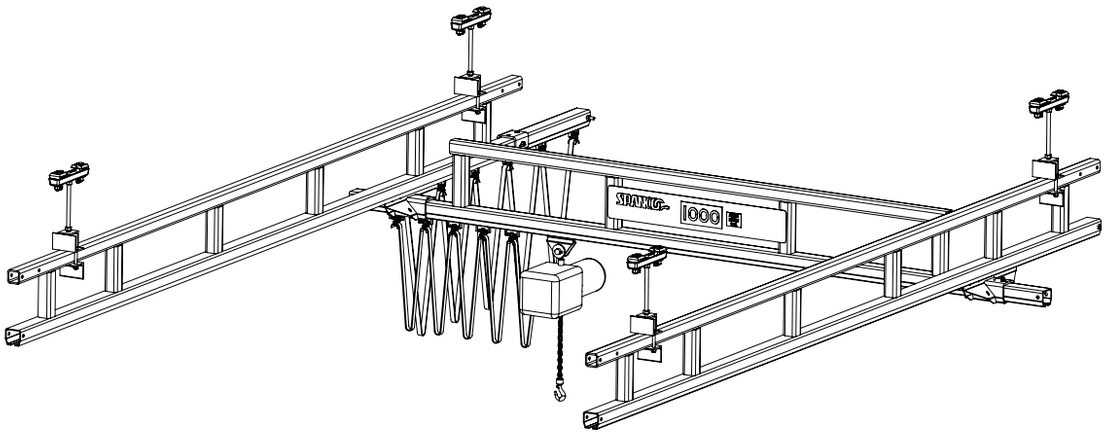

ISO 9001 REGISTERED
© SPANCO, Inc.

103-0010_rev04_09_rev1:Layout 1 2/9/11 11:23 AM Page 2

TABLE OF CONTENTS

Plain Track Runway Drawing.....4-5
Trussed Track Runway Drawing.....6-7
Design Factors.....8
Seismic Design Rating.....8
Service Factor.....8
Preparation.....9
Runway Installation.....9
Splice Installation, Plain Track.....10
Splice Installation, Trussed Track.....10-11
Bridge End Truck Installation.....12
Runway End Stop Installation.....13
Festoon Track Extension Installation, 400 Series.....13
Festoon Track Extension Installation, 500-900 Series.....14
Runway Festoon Installation.....15
Hoist Trolley and Bridge Festoon Installation.....16
Hoist Installation.....17
Service Connections.....18
Sway Bracing Requirements.....18
Warning, Safety, or Capacity Labels.....18
Acceptance Test.....19
Maintenance.....19
Appendix.....20-30
Warranty and Service Policy.....32

⚠ WARNING

This equipment, used as a crane, is NOT, in any way, designed for lifting, supporting, or transporting humans. Failure to follow specified load limitations can result in serious bodily injury or death.

Applications involving vacuums, magnets, or other high impact lifters are considered severe usage (continuous service) and require special design considerations. Please contact factory for special design pricing.

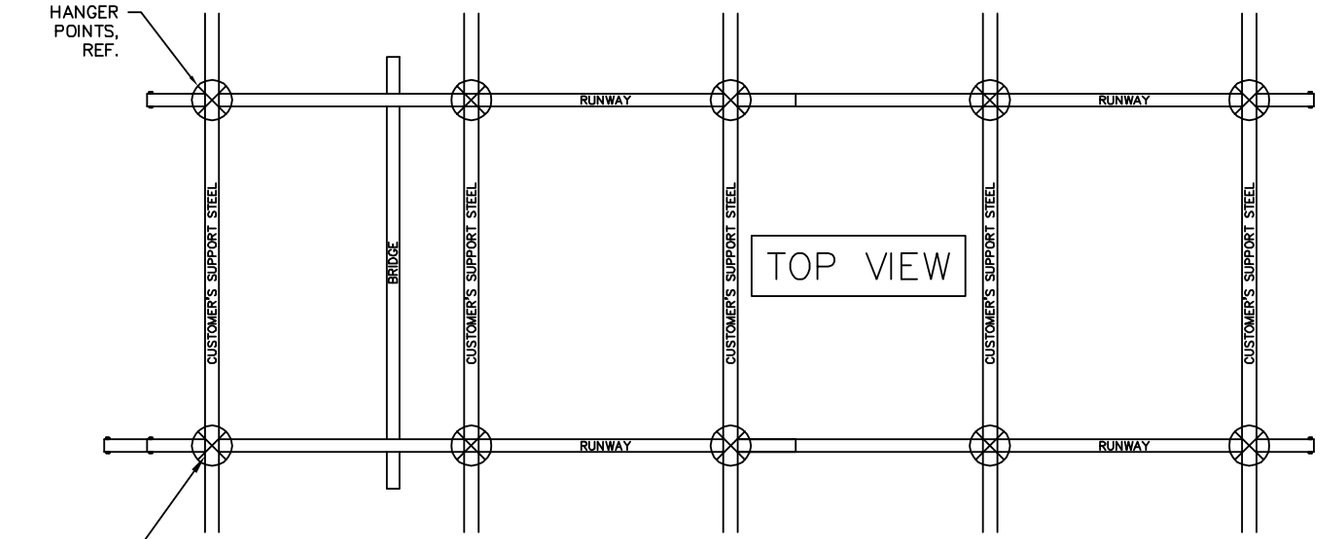

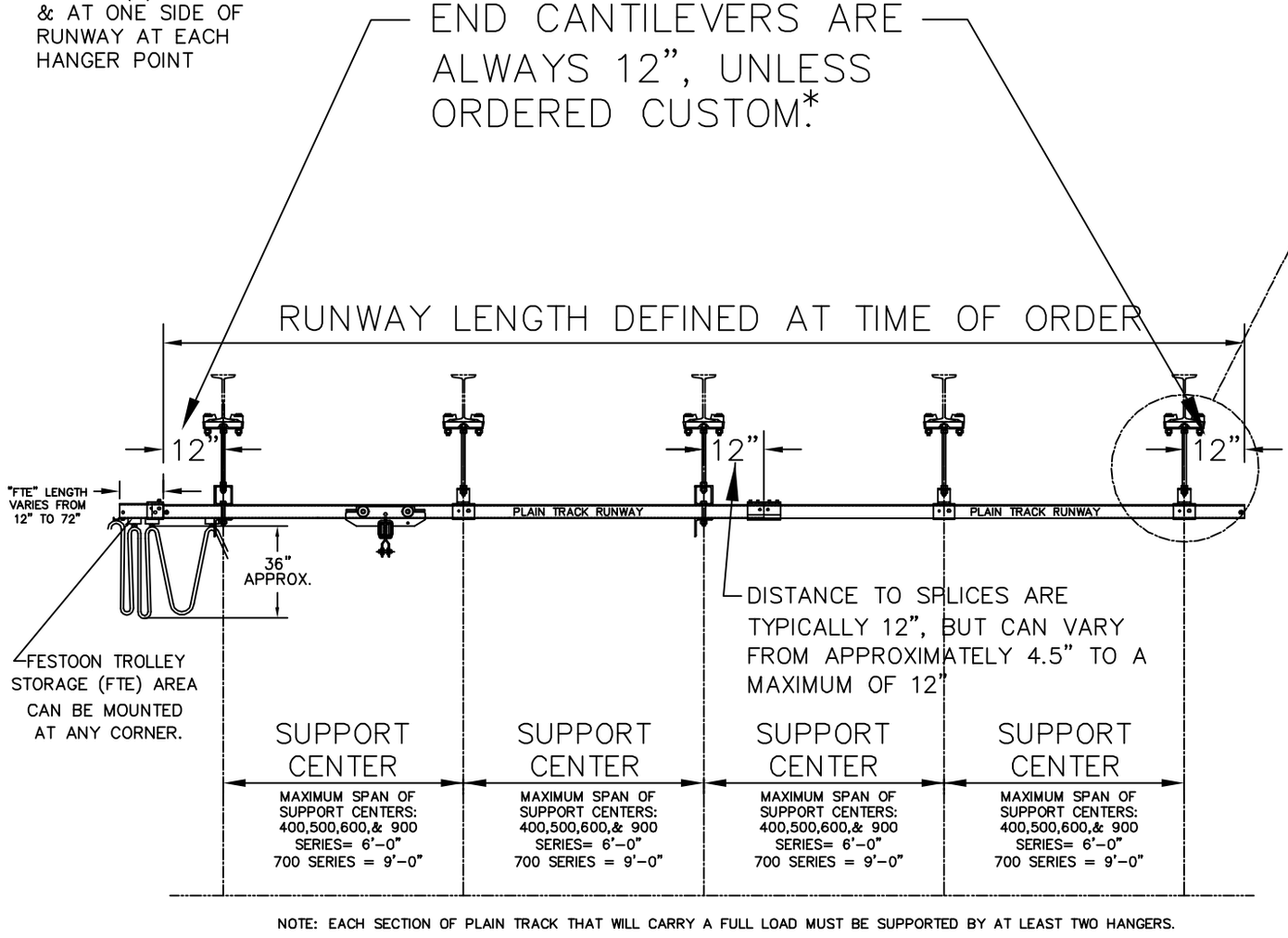

NOTE: EACH SECTION OF PLAIN TRACK THAT WILL CARRY A FULL LOAD MUST BE SUPPORTED BY AT LEAST TWO HANGERS.

*HEAVILY CUSTOMIZED SYSTEMS WILL COME WITH A DETAILED ASSEMBLY DRAWING.

SIDE VIEW OF RUNWAYS

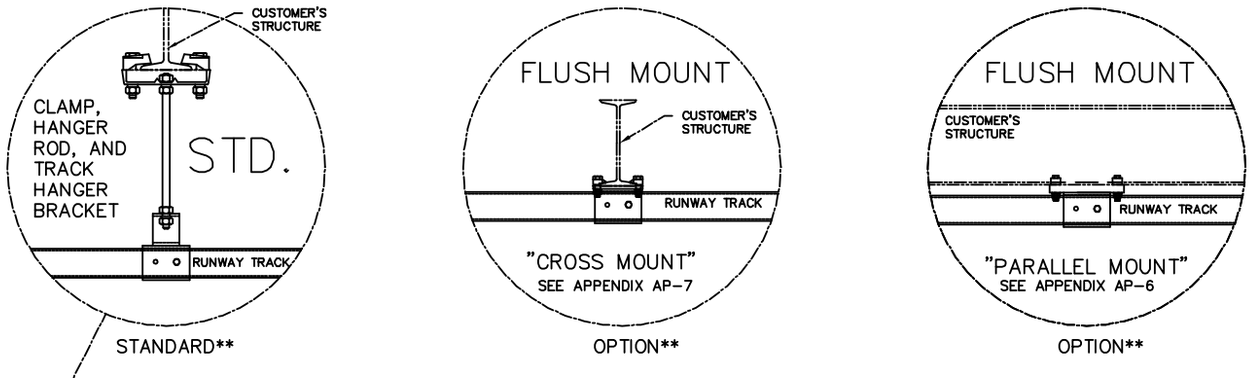

VARIOUS METHODS OF HANGING RUNWAYS

PLAIN TRACK RUNWAYS

IMPORTANT DIMENSIONS FOR TYPICAL WORKSTATION BRIDGE CRANE INSTALLATIONS

(A MULTIPLE BAY SYSTEM IS SHOWN FOR REFERENCE)

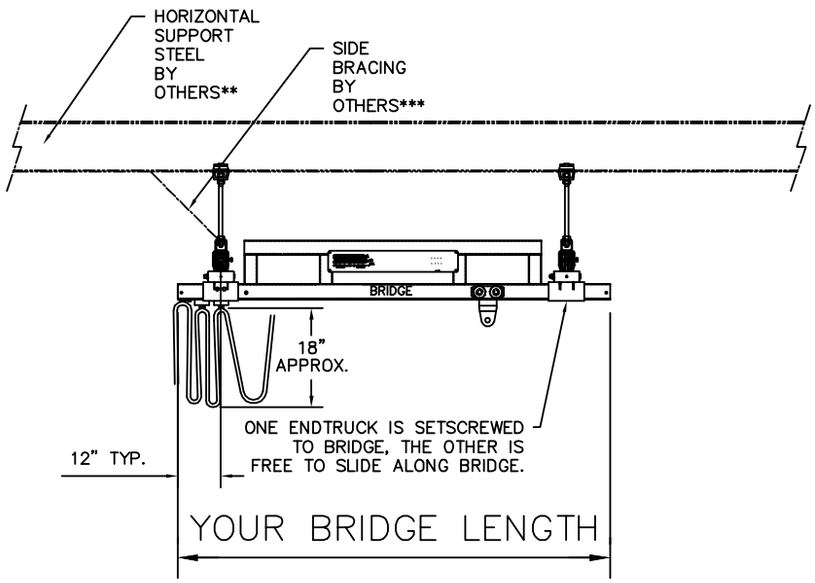

END VIEW OF BRIDGE

**IMPORTANT–IF SUPPORT STEEL IS SLOPED, SPECIAL SLOPED HANGERS MUST BE USED. CALL YOUR SPANCO SALESPERSON.

***BRACING BRACKETS, #09B0510, ARE AVAILABLE, FOR USE WITH 1" DIAMETER PIPE. CALL YOUR SPANCO SALESPERSON.

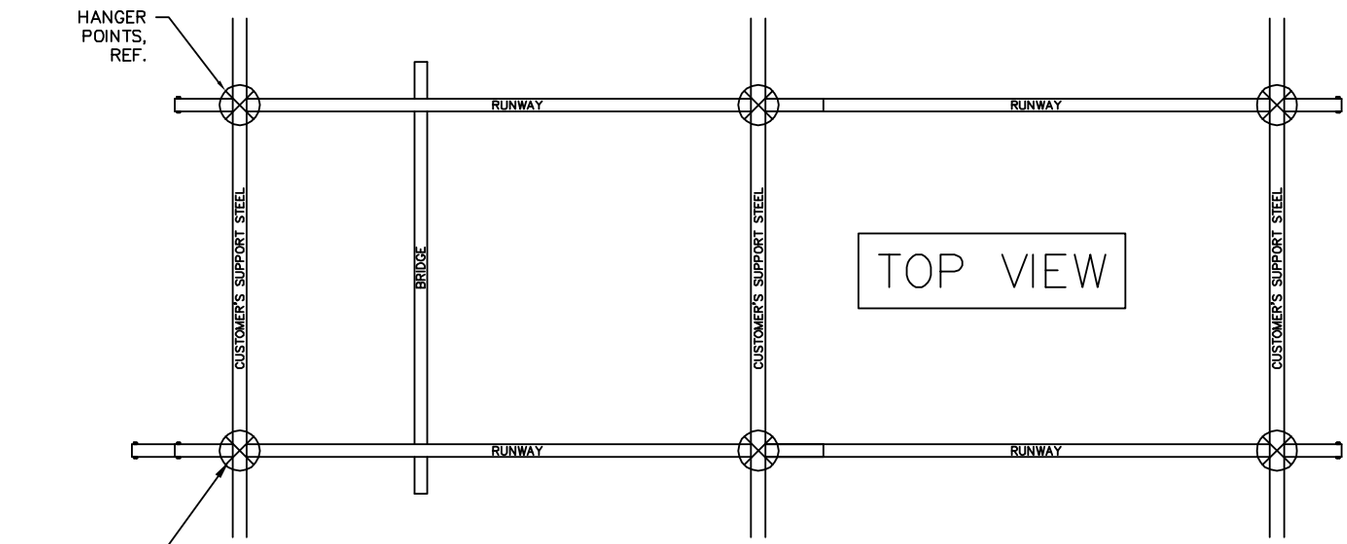

TOP VIEW

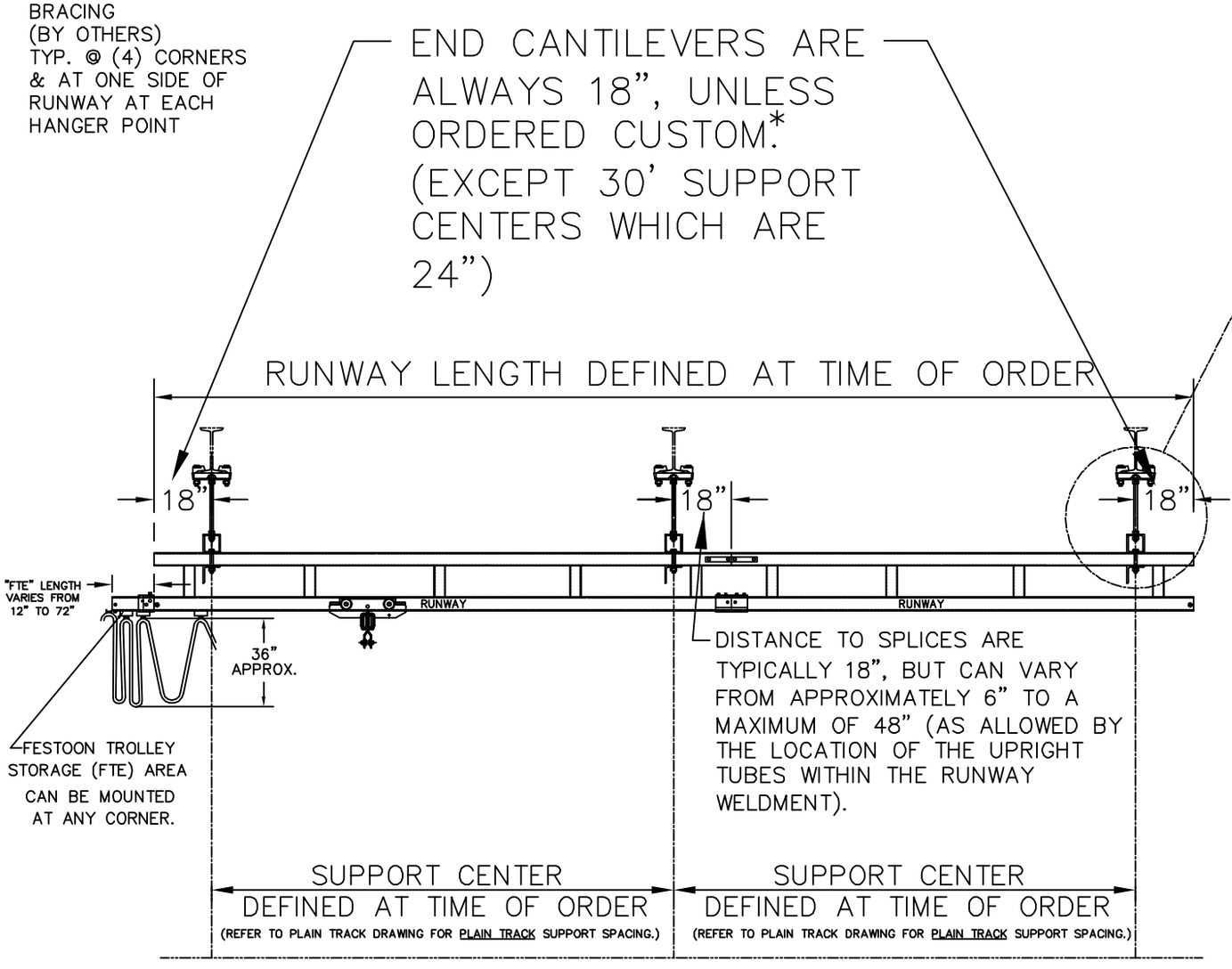

*HEAVILY CUSTOMIZED SYSTEMS WILL COME WITH A DETAILED ASSEMBLY DRAWING.

SIDE VIEW OF RUNWAYS

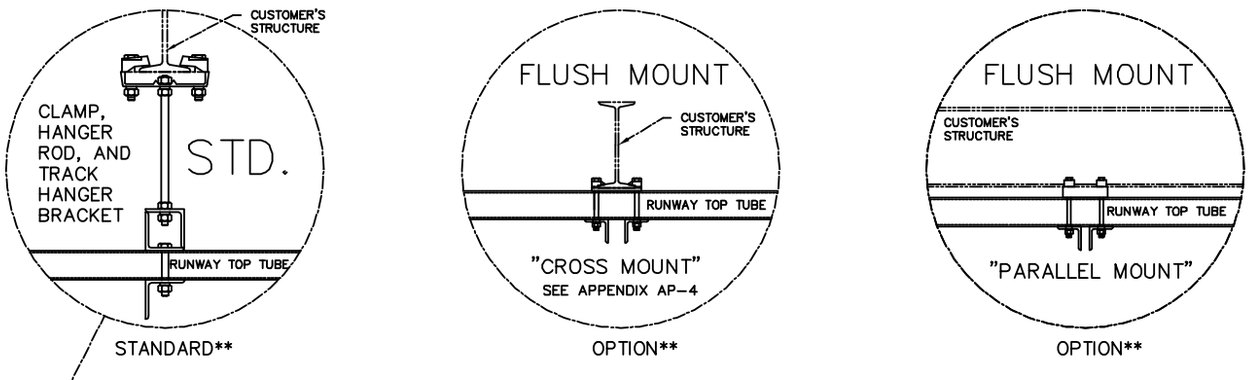

VARIOUS METHODS OF HANGING RUNWAYS

TRUSSED RUNWAYS

IMPORTANT DIMENSIONS FOR TYPICAL WORKSTATION BRIDGE CRANE INSTALLATIONS

(A TWO BAY SYSTEM IS SHOWN FOR REFERENCE)

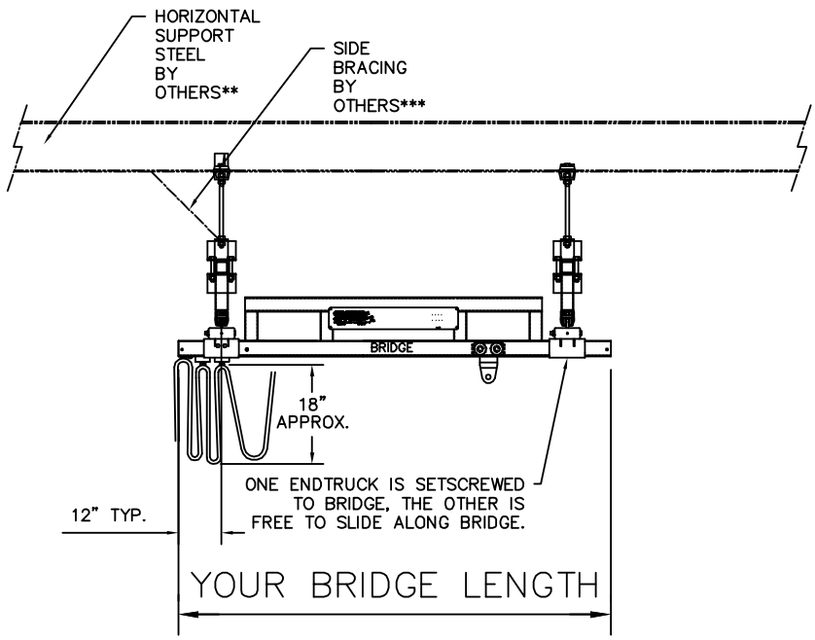

END VIEW OF BRIDGE

**IMPORTANT–IF SUPPORT STEEL IS SLOPED, SPECIAL SLOPED HANGERS MUST BE USED. CALL YOUR SPANCO SALESPERSON.

***BRACING BRACKETS, #09B0510, ARE AVAILABLE, FOR USE WITH 1" DIAMETER PIPE. CALL YOUR SPANCO SALESPERSON.

DESIGN FACTORS

Nameplate bridge capacity represents the rated load on the hoist hook. The load rating of a hoist shall not exceed the bridge rating. SPANCO's design includes an allowance of 15% of nameplate capacity for dead weight of the trolley and hoist. An additional 25% of nameplate capacity is also included for impact.

SEISMIC DESIGN RATING

All SPANCO workstation bridge cranes meet design requirements for installation and use in seismic zone 4, of the uniform building code, the worst earthquake prone areas in North America.

SERVICE FACTOR

All SPANCO workstation cranes are designed for frequent usage (heavy service) as defined:

- System or equipment is used where operational time is up to 100% of the work period and lifted load is at 50% or below rated capacity.
- System or equipment is used where operational time is less than 50% of work period and lifted load is greater than 50% of rated capacity.
- Applications involving vacuums, magnets, or other high impact lifters are considered severe usage and require special design considerations. Please contact factory for special design pricing.
- Consult factory for usage other than moderate and all instances of high cycle rates or high impact applications such as high speed air or electric hoists, vacuum lifters, or magnets.

Runway Alignment Tolerance

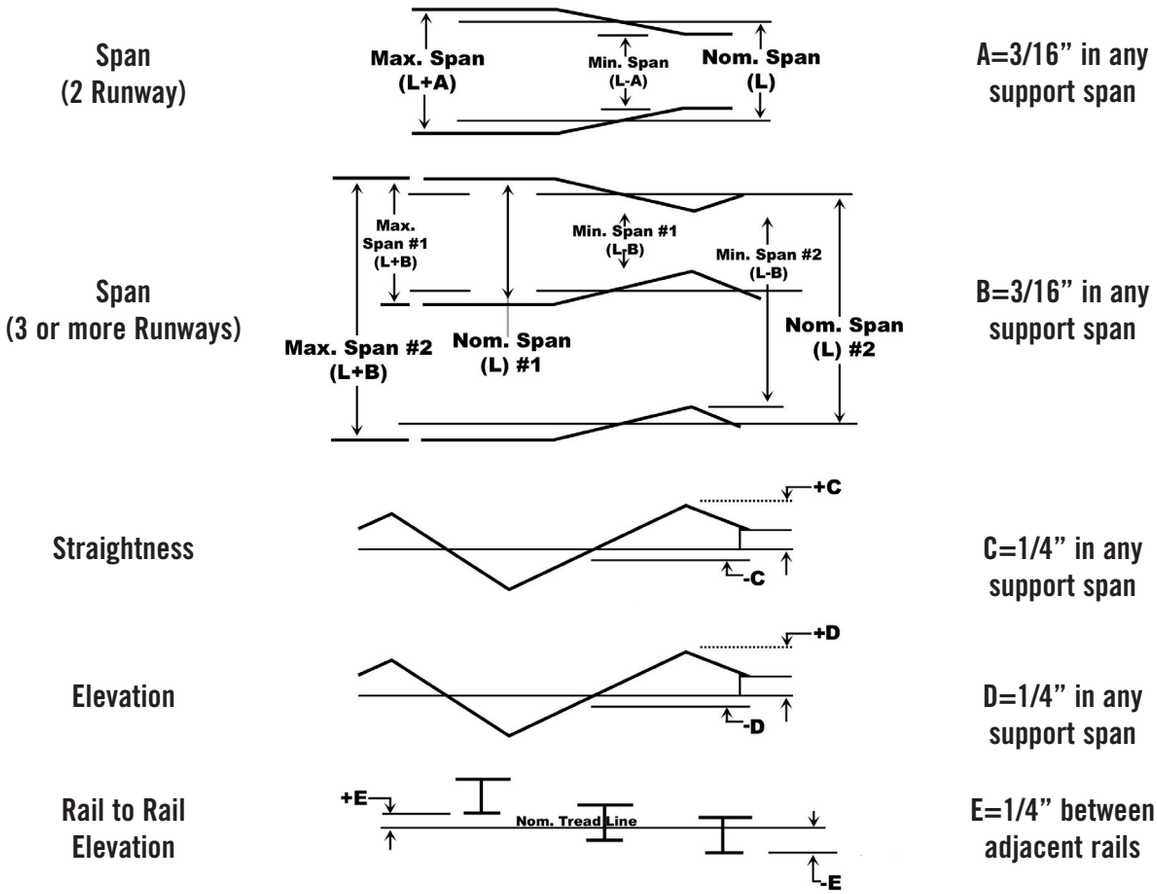

Because SPANCO Enclosed Track System provides a very high ease of movement, SPANCO recommends bridge and runway slope of no more than 1/4" in 20'-0" to prevent drift of bridge on trolley. Diagrams courtesy of Monorail Manufacturers Association MH27.1 and MH 27.2

PREPARATION

1. Before starting the installation, check the material list to be sure you have received all parts. Systems that mount directly to overhead supports with support flush mount brackets do not require lateral sway bracing.

⚠ WARNING

All systems with drop rod hangers must be laterally and longitudinally braced. Lateral sway bracing is furnished by others.

RUNWAY INSTALLATION

2. Ceiling mounted workstation design may vary from system to system. The positioning of support brackets or hangers likewise may vary with building structural arrangement as well as with track profile.

   Establish where the crane is to be installed. Bolt the proper mounting support brackets or hangers to the ceiling beam(s). See Figs. 1a-1c below. Raise the runway track section and attach it to the brackets or hangers with the appropriate fasteners. Runways should extend between 4 1/2" and 12" beyond the last support at either end for plain track runways, up to 48" for trussed runways. Festoon storage may extend beyond the last support.

⚠ WARNING

Runway endstops must be aligned longitudinally so bridge hits end stops simultaneously.

Adjustable roof beam clamp providing secure fit to horizontal beams only. Flange widths range from 2 1/4" to 8", and a maximum flange thickness of 7/16". Alternate clamps can be provided, upon request, for larger beams or for sloped beams (not horizontal).

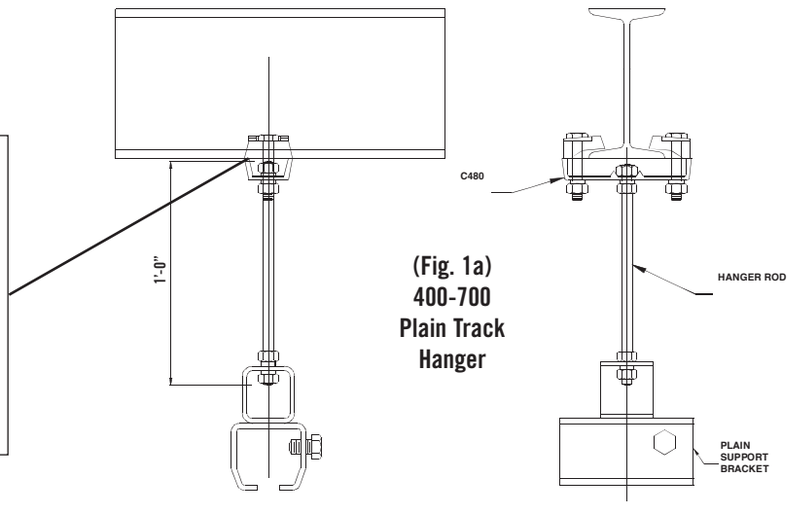

(Fig. 1a) 400-700 Plain Track Hanger

See Appendix Pg1 (AP-1) for assembly of beam clamp (C-480)

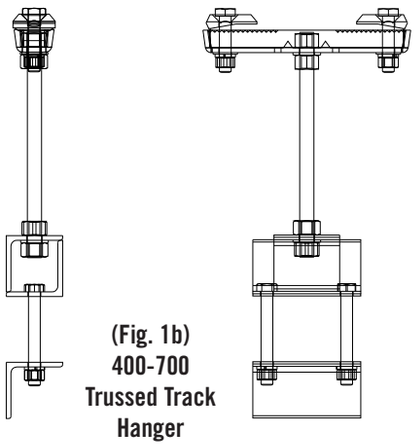

(Fig. 1b) 400-700 Trussed Track Hanger

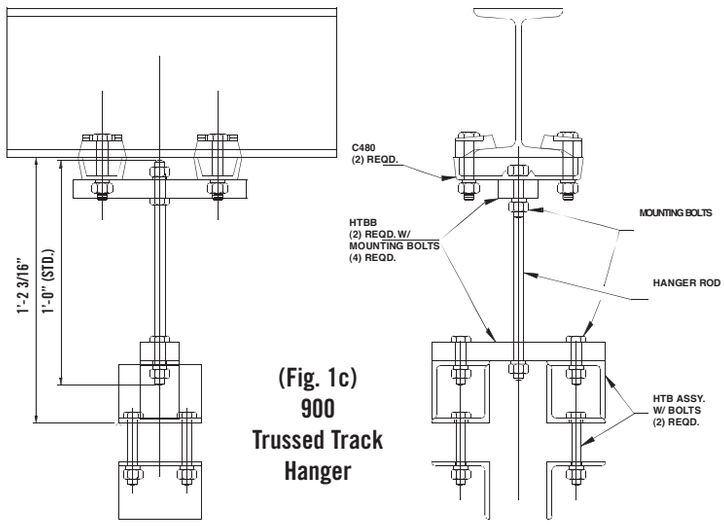

(Fig. 1c) 900 Trussed Track Hanger

SPLICE INSTALLATION

3. If your system has more than one section length of runway track, each additional section is installed in the same manner as the first, with the addition of a splice joint assembly.

   Plain Track: Splice joints should be within 12" of a support bracket or hanger as shown in Fig. 2a.

   Reinforced Runway: Splice joints should be within 48" of a support bracket or hanger.

   The track splice joint is made from a sleeve with a total of eight set screws threaded into the top and both sides. Slide the sleeve over the end of the first runway track, then butt the second runway track against the first. Center the sleeve over the joint. The two center top set screws should be tightened slightly to push the tracks against the base of the sleeve so that the two bottom surfaces of the track are even. Adjust the side set screws so that the track slots are aligned and there is a smooth transition from one track to the other, see Fig. 2b. Tighten all top set screws then side set screws for correct track alignment.

(Fig. 2a)

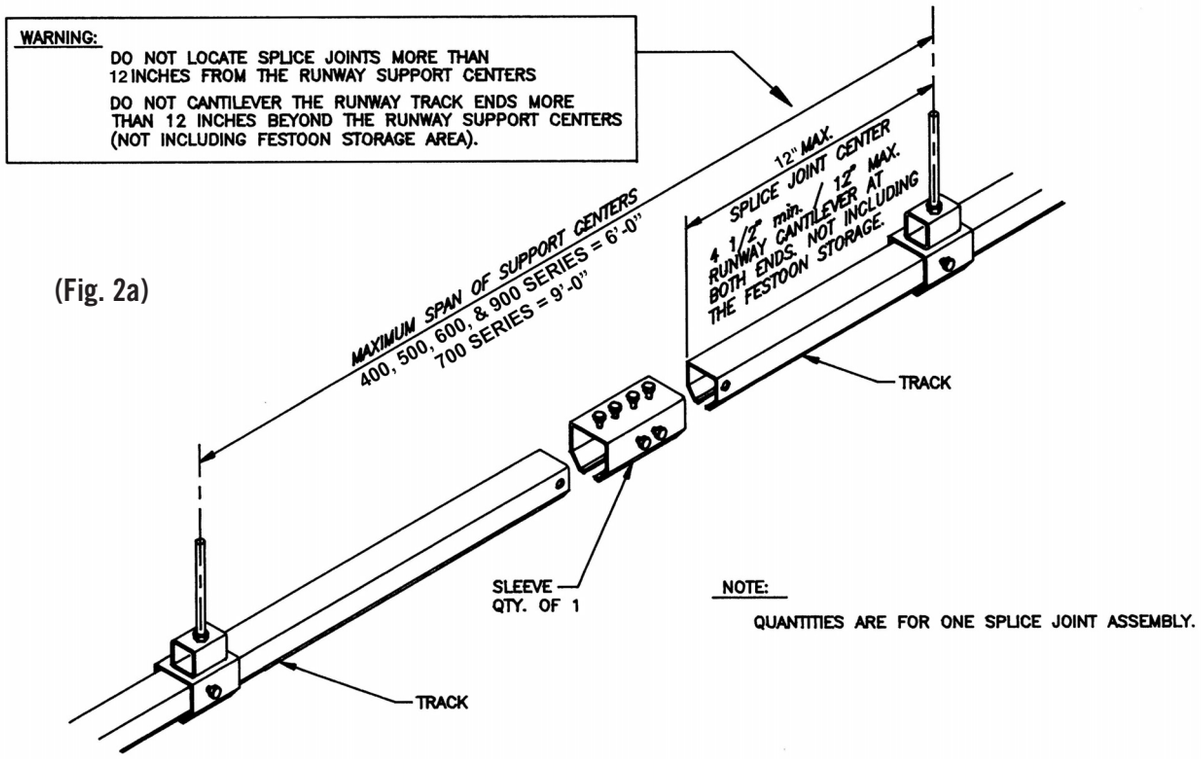

Splice Joint Track Alignment

(Fig. 2b)

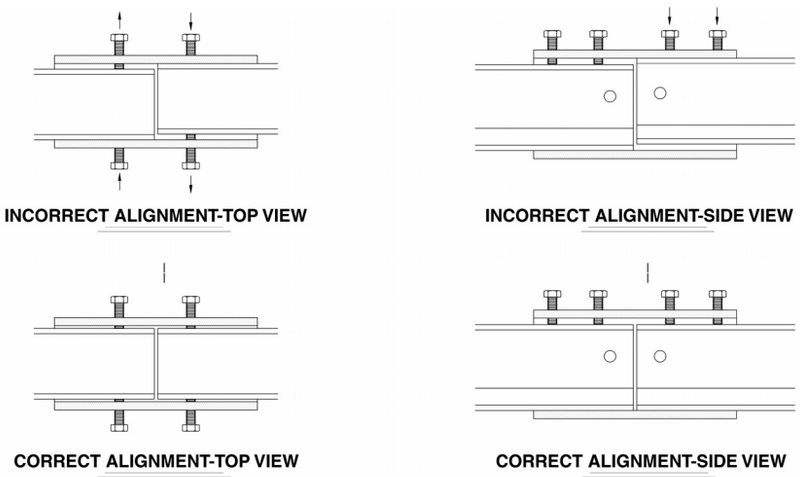

4. Trussed runway splice joints also include two splice plates and four, 1/2" bolts with nuts and lock washers. Install the splice plates to connect the ends of the truss tubes with the four through bolts provided. Torque through bolts to 50 FT. lbs., see Fig. 3.

NOTE: When end stop hole in runway or track align with sleeve set screw, move sleeve approximately 1/4 of an inch to either side of the end stop hole.

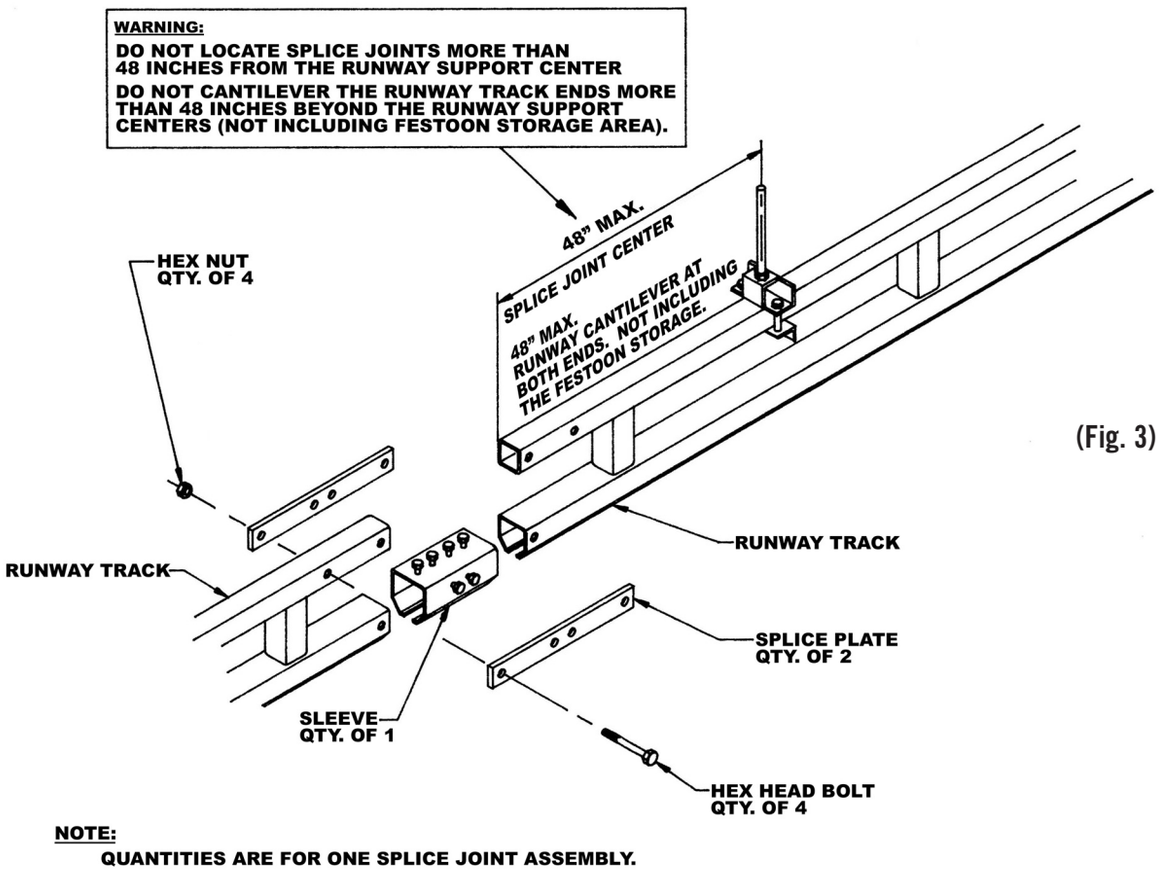

(Fig. 3)

BRIDGE END TRUCK INSTALLATION

5. Insert the bridge track into the sleeves of the end trucks. Locate the center of the end trucks approximately 12" from each end of the bridge. One end truck is secured to the bridge track with set screws, furnished with the sleeve. The other end truck is allowed to slide freely on the bridge track in order to accomodate any slight misalignment between the parallel runway tracks, see Fig. 5. Install the bridge crane by inserting both end trucks into one end of the runway tracks. Adjust and tighten the bridge end truck set screws to provide a minimum clearance of 2" between the ends of the bridge and any side obstructions. Adjust support brackets or hangers to provide a minimum clearance of 3" between the top of the bridge and any overhead obstructions.

(Fig. 5)

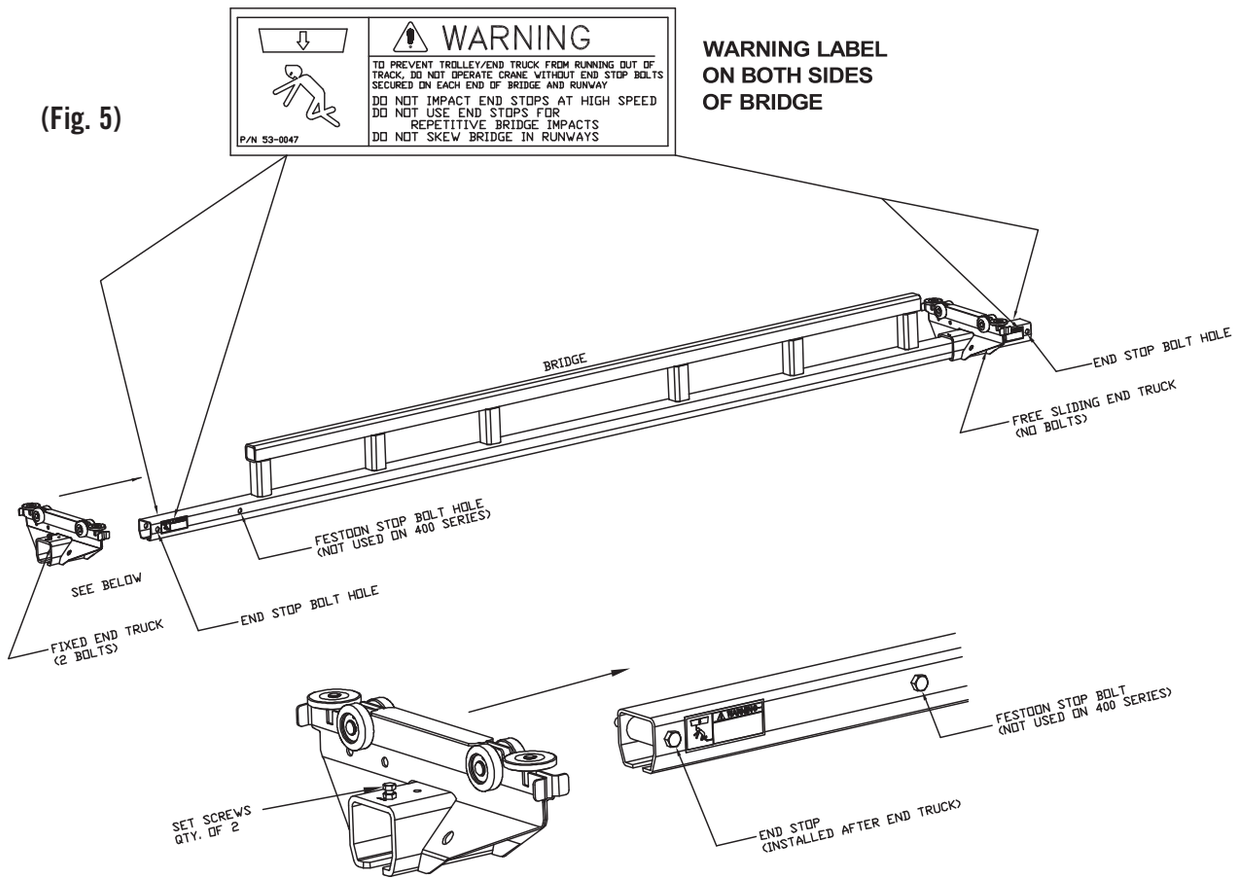

FIXED END TRUCK WITH SET SCREWS

RUNWAY END STOP INSTALLATION

6. Secure end stop assemblies, end stop bolts, and lock nuts at both ends of both runway tracks, except for the end of the festoon storage area, where applicable, see Figs. 6a and 6b.

FESTOON TRACK EXTENSION INSTALLATION

7. Install festoon trolleys and cable in runway. Use the following trolley spacing:

   Bridges..... 18" loops, approx.
   Runways and Monorails.....36" loops, approx.

   Place festoon track extension on end of runway that is closest to the power junction box. Align the festoon track extension prior to tightening any bolts. Adjust bolts in the side of the festoon track extension to insure alignment of bottom flanges of track. Clamp festoon track extension firmly into a level, straight position prior to tightening the top of the extension. Check to ensure that all surfaces of the track ends and the festoon track extension are in contact.

   Tighten top bolt to:

   400 Series.....12 FT.-lbs.
   500-900 Series.....17 FT.-lbs.

   400 Series Track

   Install special 1/4" through bolt in top of festoon track extension. See Fig. 6a. Place lock nut on through bolt and tighten. Do not place end stop at this location. Using end stop supplied with the system, install in the end of the festoon track extension.

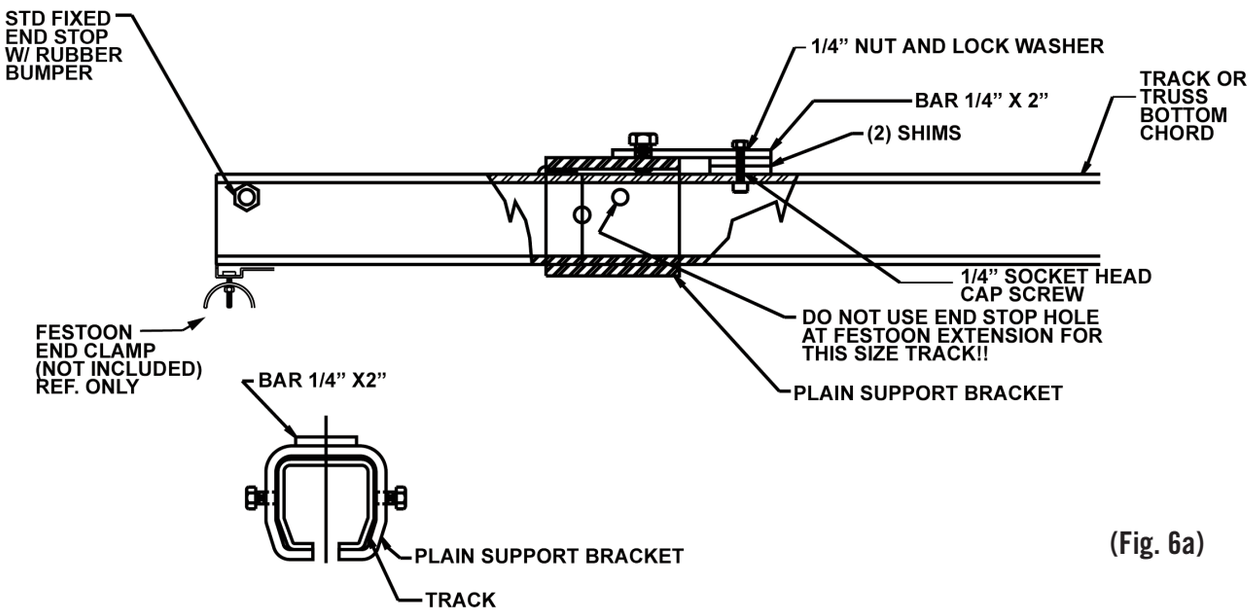

(Fig. 6a)

500-900 Series Track

Install through bolt through side of festoon track extension. See Fig. 6b. Place flat washer and lock nut on through bolt and tighten. Do not place end stop or end stop bumper supplied with system at this location.

Use end stop supplied with the system. Install according to installation instructions in the end of the festoon track extension.

NOTE: ALL end stop bolts must have the rubber bumper to ensure that festoon trolleys remain the track.

Ensure that all end stop warning labels are in place.

Install festoon end clamp to secure festoon cable at the end of the festoon track extension.

Ensure the trolleys slide across the runway and festoon track extension joint smoothly. Make necessary adjustments if required.

Ensure all trolleys stack properly in festoon track extension area, clear through bolts, and contact the end top.

Runway Festoon Installation

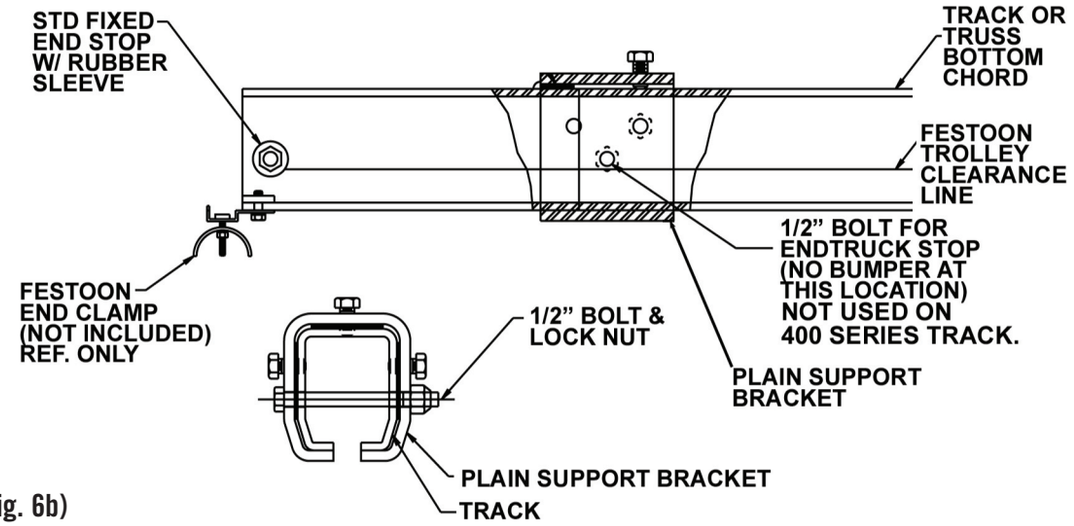

(Fig. 6b)

RUNWAY FESTOON INSTALLATION

8. Install festoon trolleys into the storage area of runway track if system includes festooning. Secure end stop bolts and rubber bumpers. Locate and secure festoon end clamps as shown in Fig. 7. Install the festoon cable on the festoon trolleys at equal spacing, approximately 6'-7" apart, for approximately 36" loops.

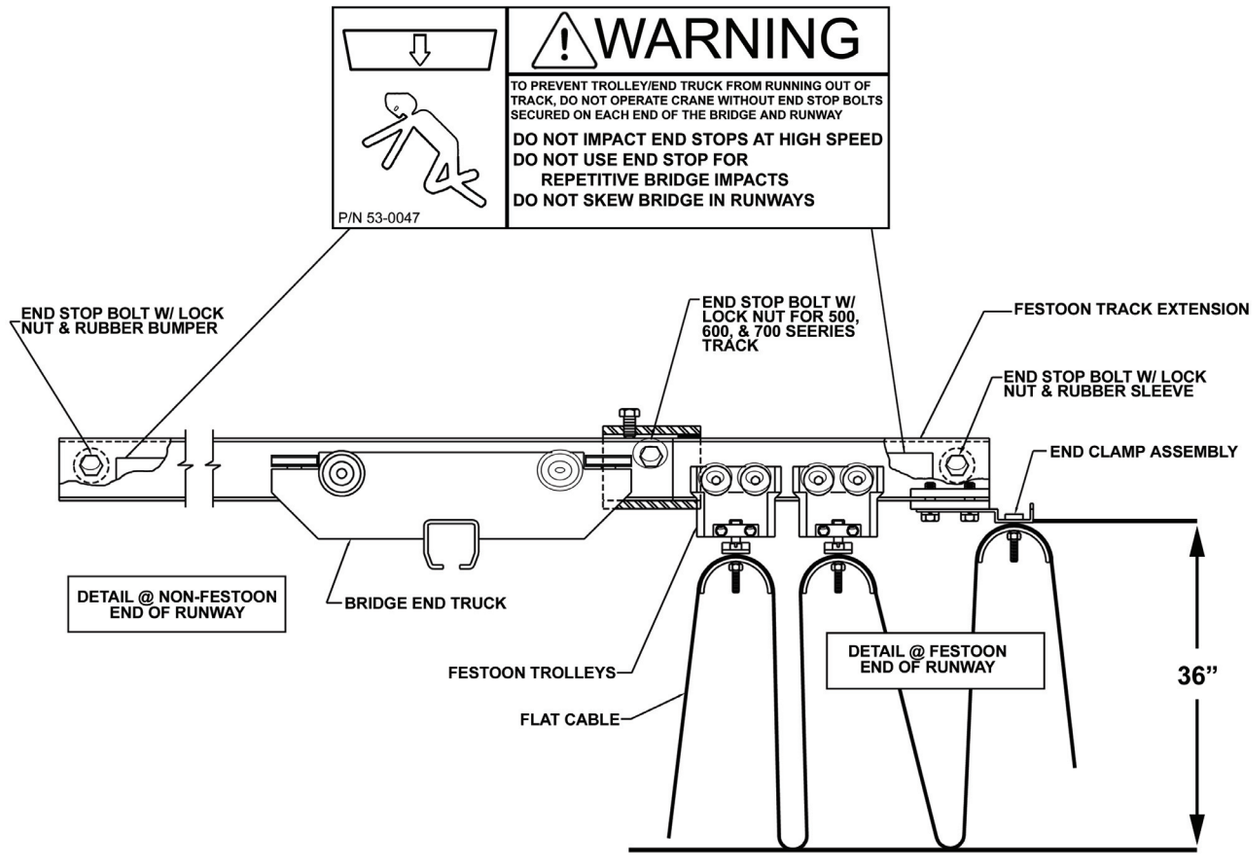

(Fig. 7)
Runway Festoon Detail
(Or Monorail Festoon Detail)

HOIST TROLLEY AND BRIDGE FESTOON INSTALLATION

9. Install hoist trolley and festoon trolleys on bridge track, if applicable, as shown in Fig. 8. Secure end stop bolts and rubber bumpers, also shown in Fig. 8.

WARNING

To prevent personal injury or death DO NOT operate crane without end stop through bolts securely in place.

Once installation is completed, the bridge and runways should be leveled. Install the lateral and longitudinal sway bracing, furnished by others, as required. The total system should then be checked for tightness of all nuts and bolts.

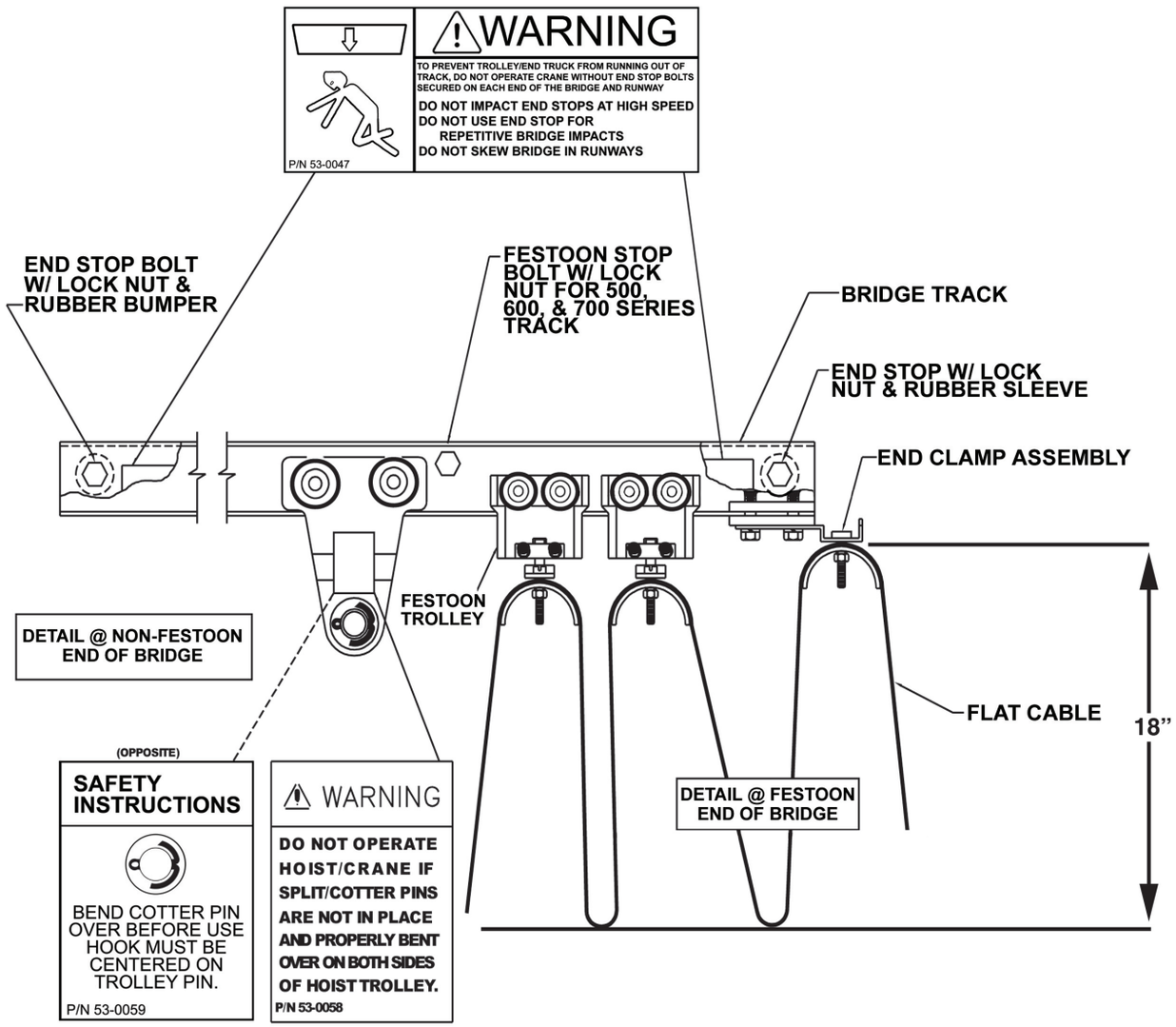

(Fig. 8)
Hoist Trolley and Bridge Festoon Detail

HOIST INSTALLATION

10. Attach hoist supplied by others to hoist trolley. Use washers on hoist mounting pin to center hoist inside hoist trolley. Reinstall washer on outside of hoist trolley (both sides) before installing or reinstalling cotter pins to secure hoist mounting pin. Replace cotter pin(s) if worn or broken. Bend cotter pin around mounting pin, see Fig. 9.

⚠ WARNING **Do not operate hoist or crane if cotter pins are not in place and properly bent over on both sides of hoist trolley. Check regularly that the cotter pins are in place and securing the hoist on the hoist trolley.**

NOTE: Some trolley load pins only have one cotter pin.

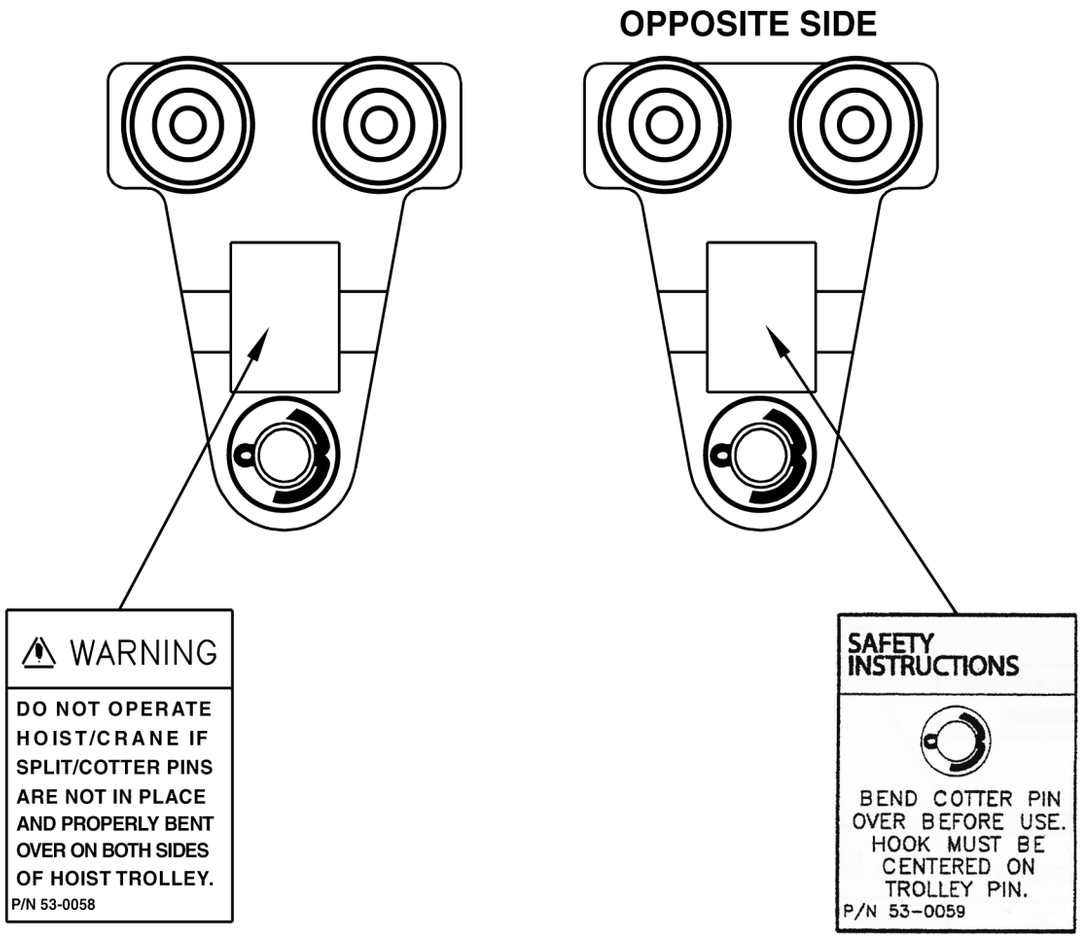

(Fig. 9)

SERVICE CONNECTIONS

11. Where applicable, follow the supplemental circuit diagrams to make service connections, such as electrical power. Make sure services are not energized while making any connections and that they match the specified supply on the circuit diagram.

WARNING, SAFETY, OR CAPACITY LABELS

12. **If at any time these labels are lost, stolen, removed or become illegible, contact SPANCO at (800) 869-2080 for free replacements.** Please order by part number on the label or by the facsimiles in this manual.

SWAY BRACING REQUIREMENTS (SUPPLIED BY OTHERS)

- Sway bracing is required for all systems with hanger rods.
- Bracing is required at all corners of systems in both directions. (laterally and longitudinally).
- Intermediate bracing is required on one side of runways at each hanger closest to runway splices.
- Sway bracing shall be used to reduce lateral stresses on hanger rods and help prevent system hardware from loosening and fatigue due to cycle loading.
- SPANCO is not responsible for design of supporting structures or attachments of system hangers and/or bracing to supporting structures. All supporting structures shall be designed by a qualified person using all applicable local, state, and national code requirements.
- Support structures shall be designed per requirements of “American Institute of Steel Construction” (AISC) specifications for design, fabrication, and erection of structural steel for buildings. Specific attention shall be given to requirements for impact and deflection to maintain the integrity of the complete building/crane system. All responsibility for the final design shall rest with the qualified person and NOT SPANCO.
- All bracing shown in this drawing is to be used as a guide only and shall be considered as the minimum required for any SPANCO ceiling mounted system. Minimum pipe size shall be 1” ø sch. 40 for systems with hanger rods up to 6’-0” long. Systems with rods longer than 6’-0” shall be considered to require special attention.
- Other bracing materials and designs may be acceptable provided they are designed by a qualified person.

ACCEPTANCE TEST

After the SPANCO enclosed track crane or monorail system has been installed, OSHA requires an acceptance test before operating and also after any modifications. This acceptance test should be performed by an authorized dealer or installer.

IMPORTANT MAINTENANCE INFORMATION

At the end of the first month after a new installation, an inspection of the system should be performed. All nuts, bolts, and screws should be checked for tightness. All end stops, cotter pins, and hoist trolleys should be checked for abnormal wear or breakage. Check all track splices for alignment and that end trucks and festoon trolleys travel smoothly through the joints. Also, check that all festoon cables and/or hoses are securely clamped to the festoon trolleys and end clamps. Adjust as necessary.

Thereafter, a complete inspection of all fasteners and connections should be performed annually or every 2000 hours, whichever comes first. It is important to note that every system application and use will be different, therefore some conditions of use should require more frequent inspection. Examples of such conditions might be two or three shift operations, or any high, repetitive, fast movement of the crane.

It is expected that every time an operator uses a SPANCO crane or monorail system, they visually inspect the system before using it and note any unusual or abnormal operation of the system while using it. Meticulous, careful operation of the system will help minimize system maintenance.

ITEM	CHECK
Nuts, Bolts, Screws	Tightness
End Stops, Cotter Pins, End Trucks, Hoist Trolley(s), Track, and Supports	Abnormal wear or breakage
Track Splices	Alignment and smooth travel through joints
Festoon Cable/Hoses	Clamped securely, abnormal wear or breakage

103-0010_rev04_09_rev1:Layout 1 2/9/11 11:23 AM Page 20

APPENDIX

AP-1 C-480 Assembly Instructions

AP-2 Standard Truss Hanger, 400-700

AP-3 Standard Plain Track Hanger

AP-4 Standard Truss Hanger, 900

AP-5 Flush Truss Cross Mount

AP-6 Optional Clamp for Sloped Ceilings

AP-7 Optional Flush Plain Track Parallel Mount

AP-8 Optional Flush Plain Track Cross Mount

AP-9 Optional Clamp for Large Ceiling Beams

AP-10 Rotating Plain Track Flush Mount

C-480 ASSEMBLY INSTRUCTIONS

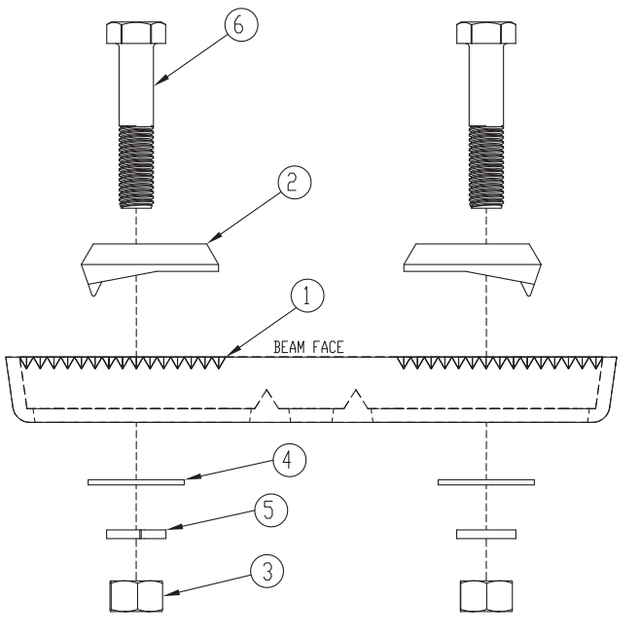

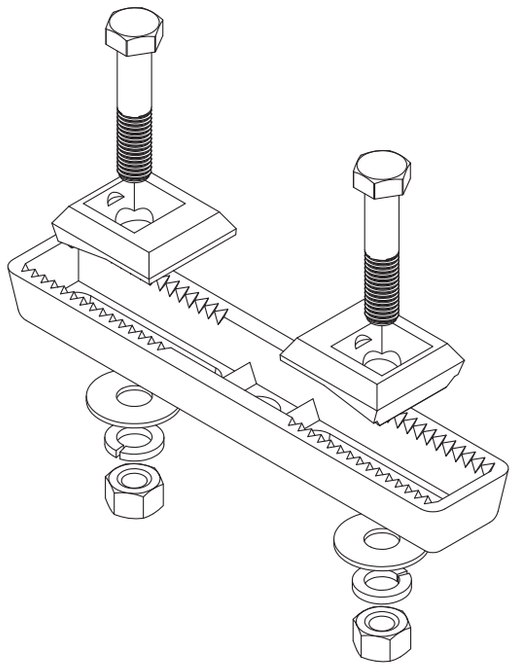

1. (1) C-480-BASE
2. (2) C-480-CLAMP
3. (2) C-480-NUT
4. (2) C-480-FLATWASHER
5. (2) C-480-LOCKWASHER
6. (2) C-480-BOLT

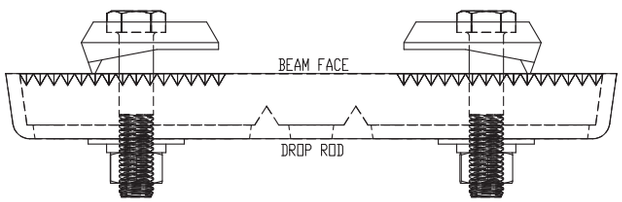

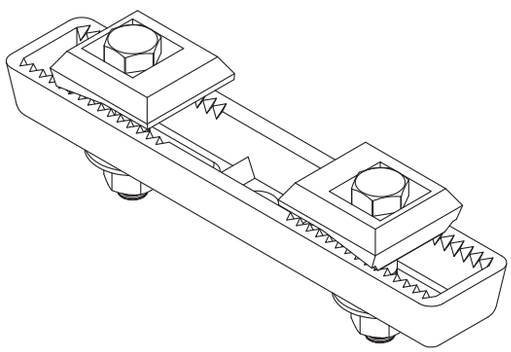

SPANCO® Inc.
Promise to perform.

AP-2

CEILING MOUNT TRUSS HANGER

STANDARD HANGER ARRANGEMENT FOR ALL 400 THROUGH 700 TRUSSES

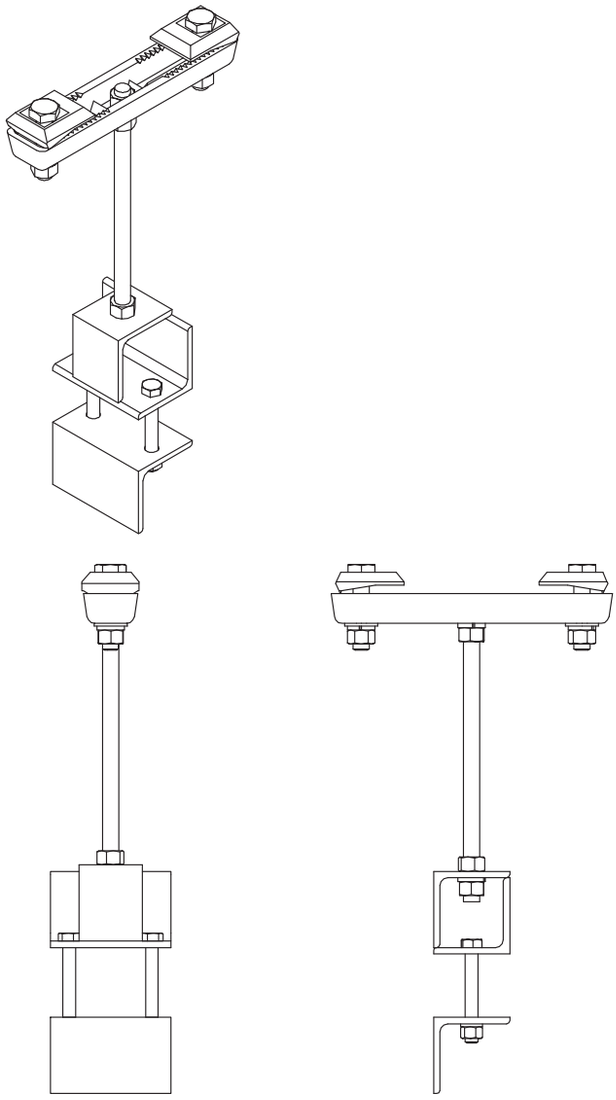

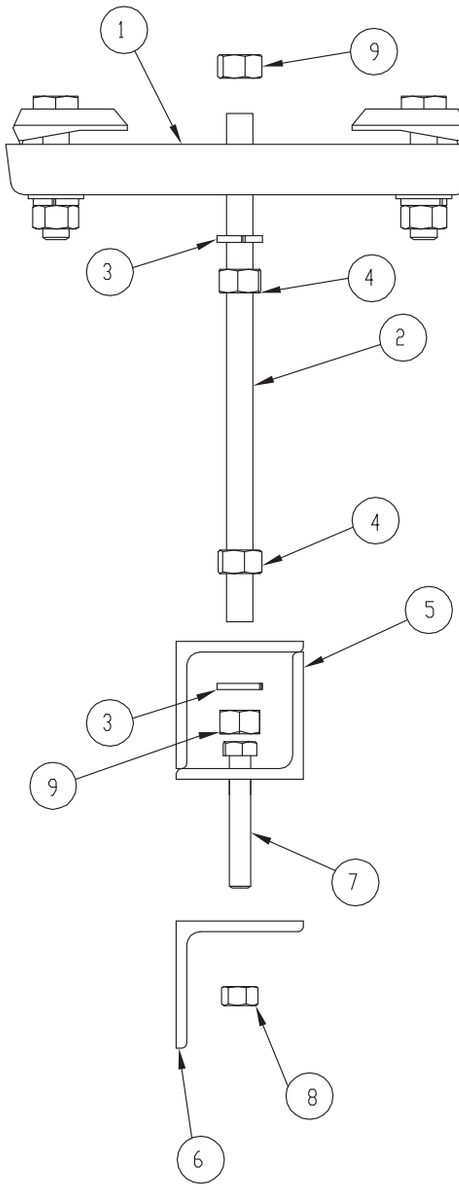

1. (1) BEAM CLAMP, “C-480”
2. (1) TREADED ROD
3. (2) LOCK WASHER
4. (4) HEX NUT
5. (1) HANGER TRUSS BRACKET, “HTB”
6. (1) L-ANGLE (2 HOLES)
7. (2) BOLT, HEX HEAD
8. (2) LOCK WASHER
9. (2) NUT, HEX

SPANCO® Inc.
Promise to perform.

103-0010_rev04_09_rev1:Layout 1 2/9/11 11:23 AM Page 23

CEILING MOUNT PLAIN TRACK HANGER

STANDARD HANGER ARRANGEMENT FOR ALL STD 400 THROUGH 900 SYSTEMS

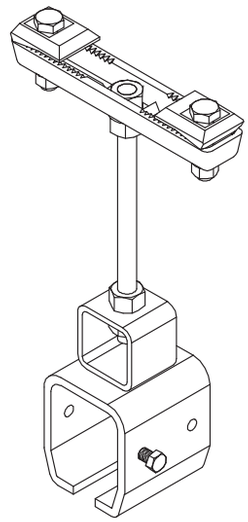

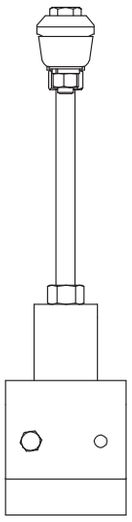

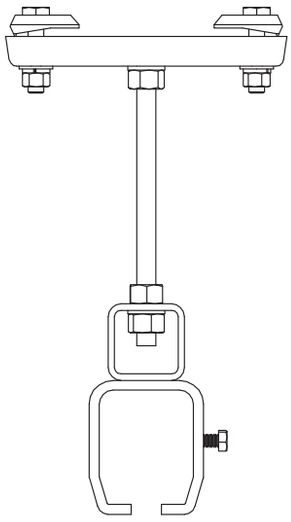

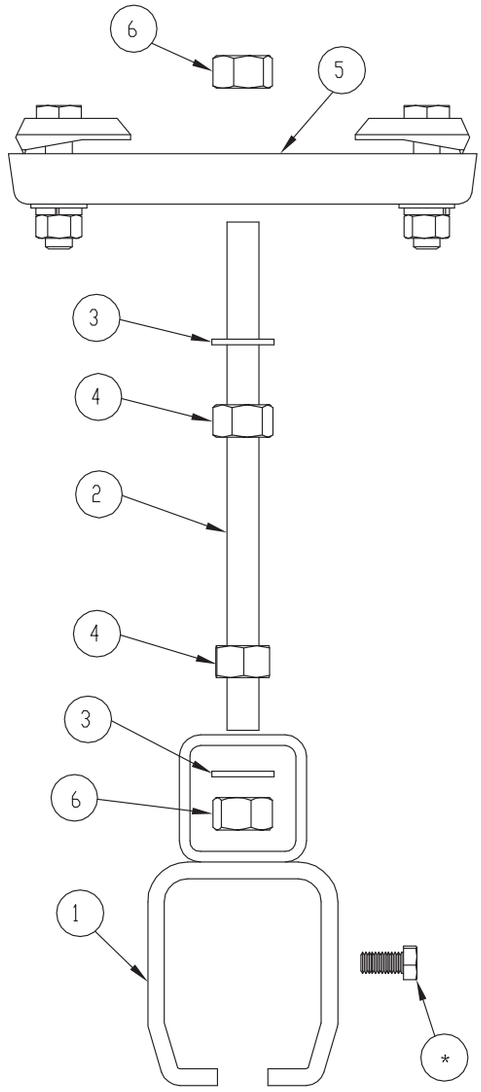

1. (1) PLAIN TRACK HANGER BRACKET, “HB”
2. (1) THREADED ROD
3. (2) LOCK WASHER
4. (4) NUT, HEX
5. (1) BEAM CLAMP, “C-480”
6. (1) HEX BOLT

SPANCO® Inc.
Promise to perform.

AP-4

900 SERIES CEILING MOUNT TRUSS HANGER

STANDARD ARRANGEMENT FOR ALL 900 TRUSSES

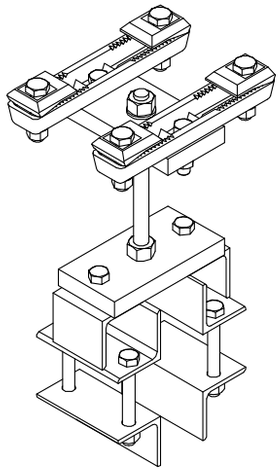

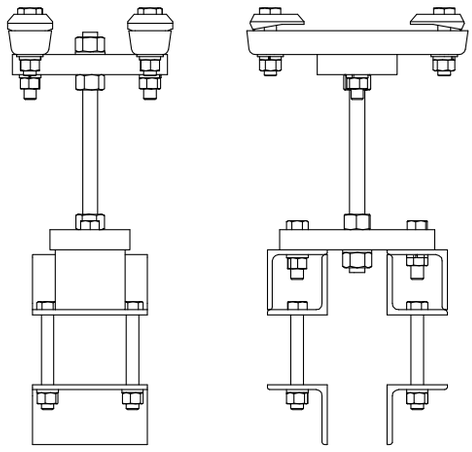

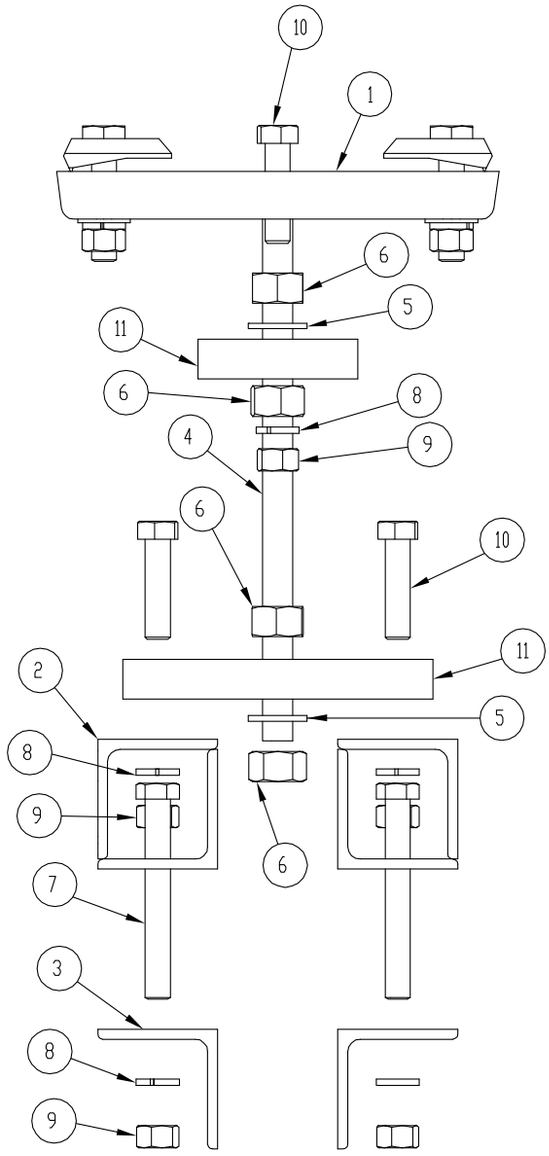

1. (2) BEAM CLAMP, “C-480”
2. (2) HANGER TRUSS BRACKET, “HTB-W”
3. (2) L-ANGLE, “HTB-1”
4. (1) ROD, THREAD 3/4-10UNC
5. (2) 3/4” LOCK WASHER
6. (4) NUT, HEX 3/4”-10NC
7. (4) HEX BOLT 5/8”-11NC X 5 1/2”
8. (8) 5/8” LOCK WASHER
9. (8) 5/8” -11UNC HEX NUT
10. (4) 5/8” -11UNC X 2 1/2” HEX HEAD BOLT
11. (2) BAR, 900 SERIES HANGER CONNECTOR, “HTBB”

SPANCO® Inc.
Promise to perform.

FLUSH MOUNT TRUSS CROSS MOUNT

1. SUPPORT BEAM
2. (4) LINDAPTER
3. (4) HEX BOLT
4. (4) FLAT WASHER
5. (4) LOCK WASHER
6. (4) HEX NUT
7. (2) ACT
8. (1) PCT
9. (4) CLIPPED WASHER*

* CLIP WASHER OR PACKING MAY BE REQUIRED TO ACCOMODATE THICKER FLANGES - THESE ARE NOT ALWAYS NEEDED.

TORQUE ALL FASTENERS
5/8" - 108 FT-LBS
3/4" - 210 FT-LBS

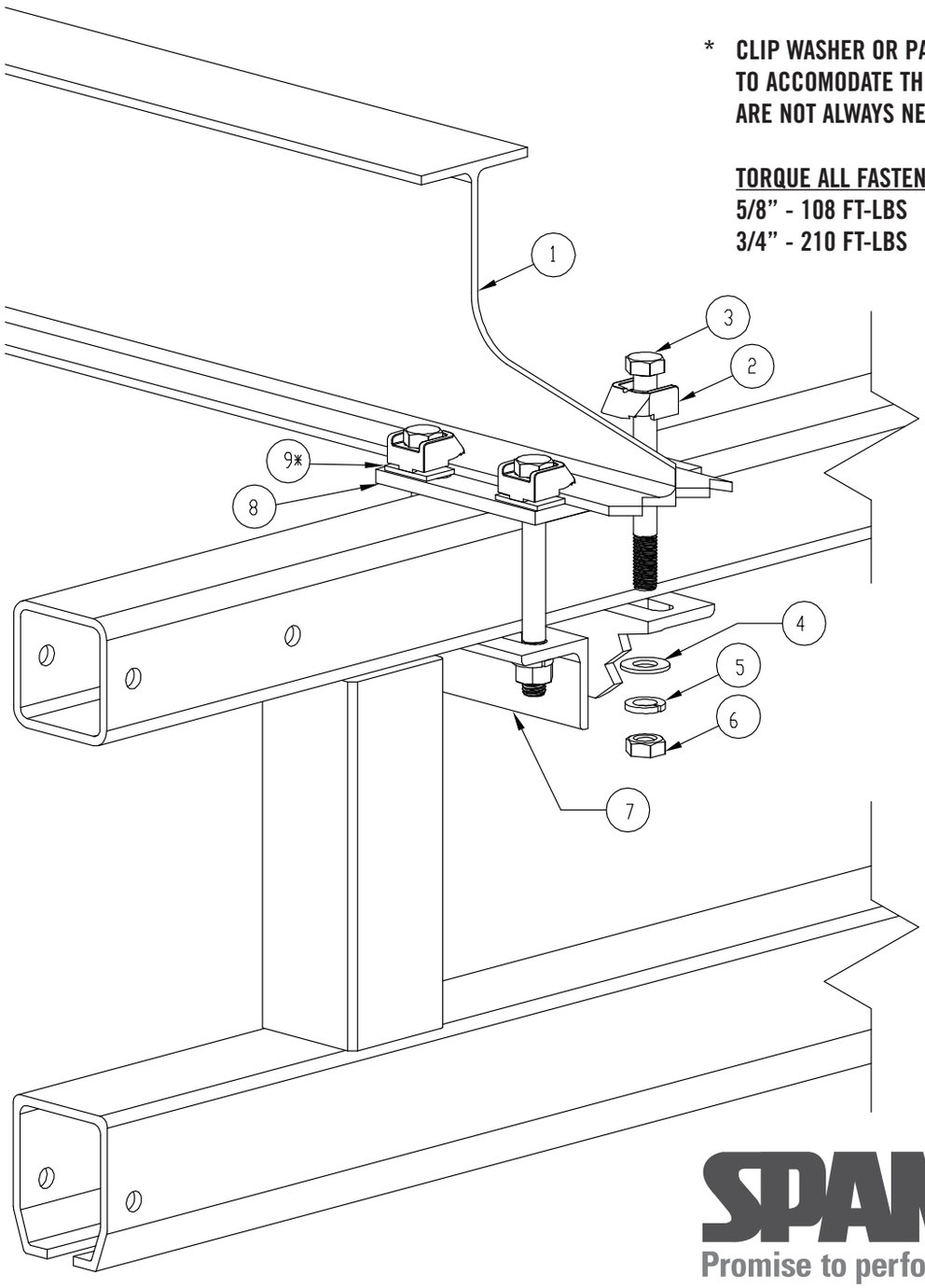

SPANCO® Inc.
Promise to perform.

103-0010_rev04_09_rev1:Layout 1 2/9/11 11:23 AM Page 26

AP-6

SLOPED HANGER

Assembly Instructions:

HANGER ROD NUT
(5/8" OR 3/4")
TORQUE NUT TO NUT TO
A VALUE OF 112 FT⁂LB.

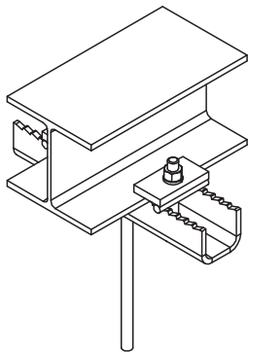

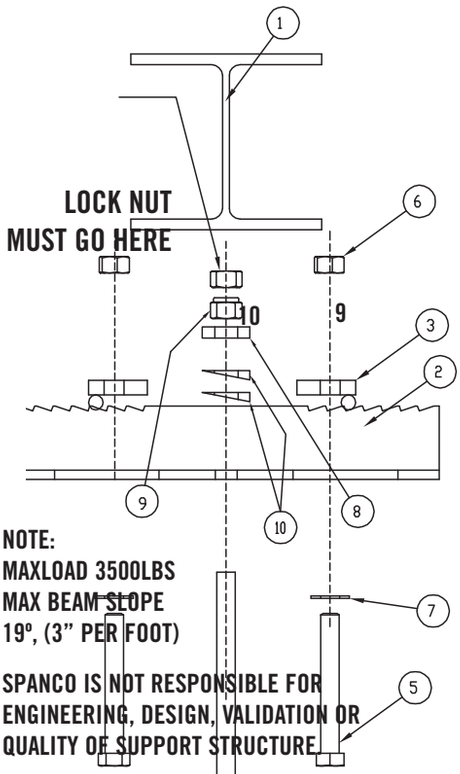

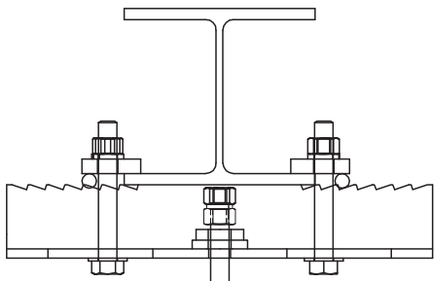

NOTE:
MAXLOAD 3500LBS
MAX BEAM SLOPE
19º, (3" PER FOOT)

SPANCO IS NOT RESPONSIBLE FOR
ENGINEERING, DESIGN, VALIDATION OR
QUALITY OF SUPPORT STRUCTURE.

1. Nuts must be torqued to prevent rod from turning out.
2. Clips must be positioned such that they seat fully in cutout, with the bolt as close as possible to the edge of the beam flange.
3. Position clips such that they are an equal number of cutouts from the center.
4. Tighten nut 6 to pull clamp channel tightly against beam.

1. (Ref) Existing Building Structure
2. (1) Beam Clamp Channel
3. (2) Beam Clamp Clip
4. (Ref) Hanger Rod (5/8" or 3/4")
5. (2) 5/8"-11 NC X 4 1/2", GR 5
6. (2 Ref) 5/8"-11 NC Hex Nuts
7. (2) 5/8" Flat Washer
8. (2) 5/8" Lockwasher
9. (1) Spherical Washer (5/8" or 3/4")
10. (1) Lock Nut (5/8" or 3/4")
11. (2) Bevel Washer

SPANCO® Inc.
Promise to perform.

OPTIONAL FLUSH MOUNT

400-900 SERIES FLUSH MOUNT PLAIN TRACK PARALLEL MOUNT

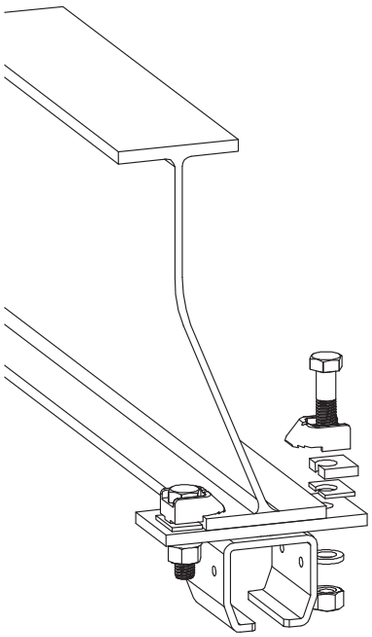

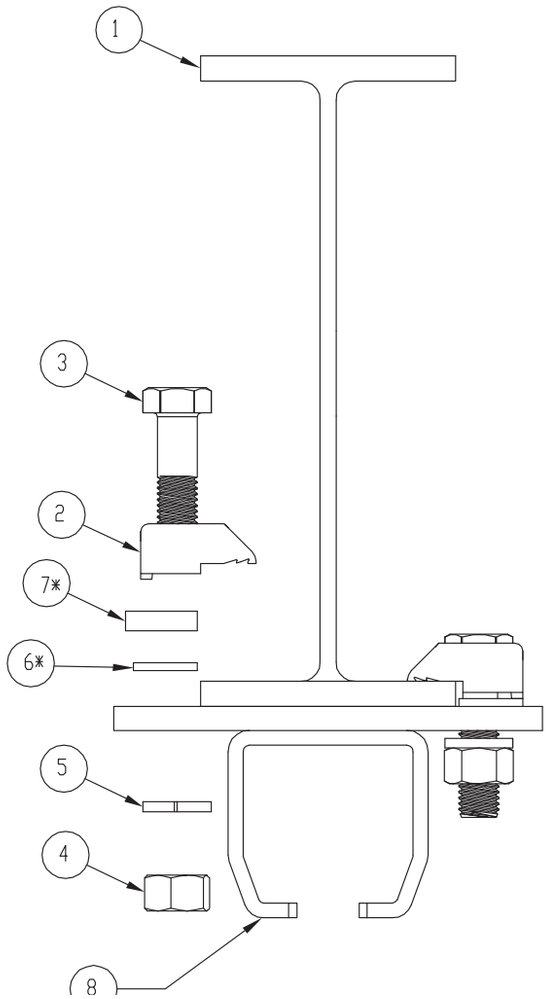

1. SUPPORT BEAM
2. (2) LINDAPTER
3. (2) HEX BOLT
4. (2) HEX NUT
5. (2) LOCK WASHER
6. (2) CLIPPED WASHER* (OPTIONAL)
7. (2) PACKING* (OPTIONAL)
8. (1) HANGER BRACKET

* OPTIONAL CLIP WASHER OR OPTIONAL PACKING MAY BE REQUIRED TO ACCOMODATE THICKER FLANGES - THESE ARE NOT ALWAYS NEEDED.

TORQUE ALL FASTENERS
5/8” - 108 FT-LBS
3/4” - 210 FT-LBS

SPANCO® Inc.
Promise to perform.

AP-8

OPTIONAL FLUSH MOUNT

400-900 SERIES FLUSH MOUNT PLAIN TRACK CROSS MOUNT

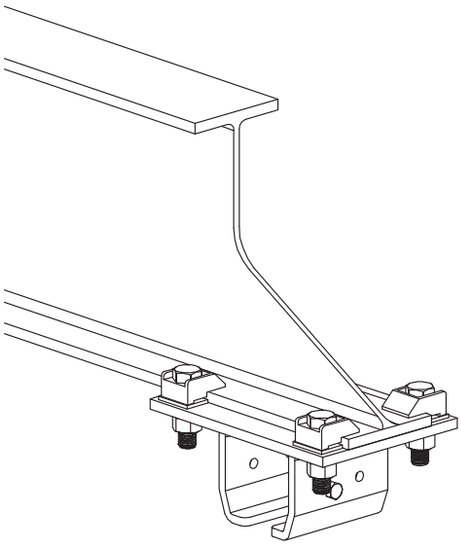

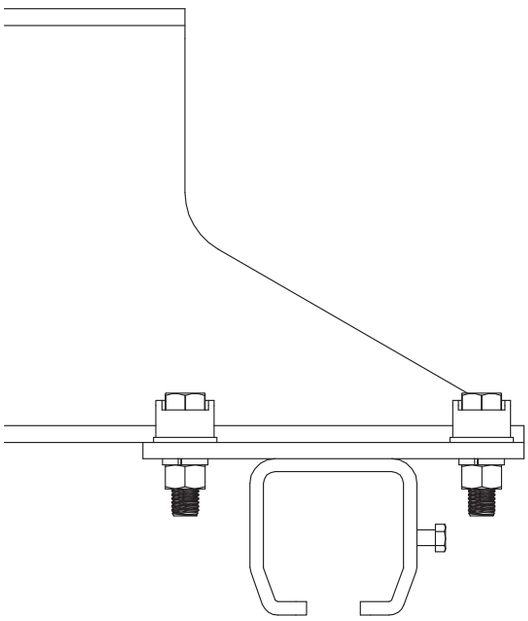

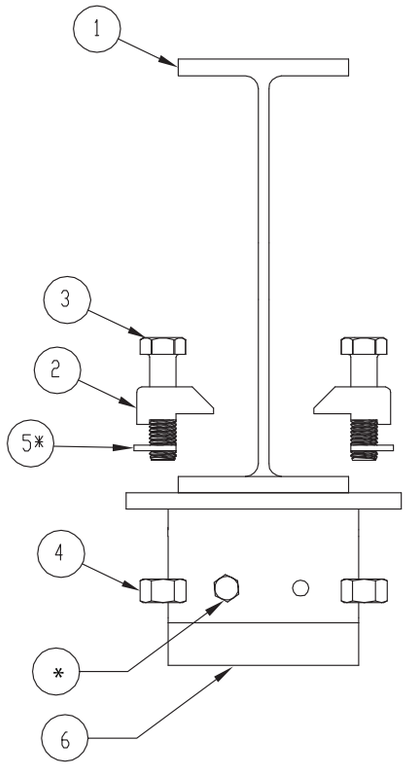

1. SUPPORT BEAM
2. (4) LINDAPTER
3. (4) HEX BOLT
4. (4) HEX NUT
5. (4) LOCK WASHER
6. (4) CLIPPED WASHER* (OPTIONAL)
7. (1) HANGER BRACKET
8. (1) TRACK HANGER BOLT

* OPTIONAL CLIP WASHER OR OPTIONAL PACKING MAY BE REQUIREDTO ACCOMODATE THICKER FLANGES - THESE ARE NOT ALWAYS NEEDED.

TORQUE ALL FASTENERS
5/8” - 108 FT-LBS
3/4” - 210 FT-LBS

SPANCO® Inc.
Promise to perform.

OPTIONAL CEILING MOUNT TRUSS HANGER C-482

USED TO HANG DROP RODS ON BEAMS LARGER THAN 8” WIDE AND 7/16” THICK AND UP TO 10” WIDE AND 5/8” THICK

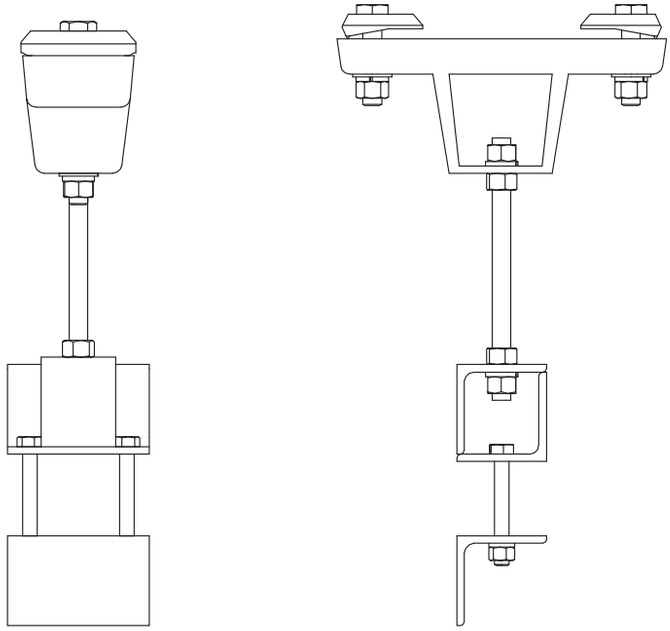

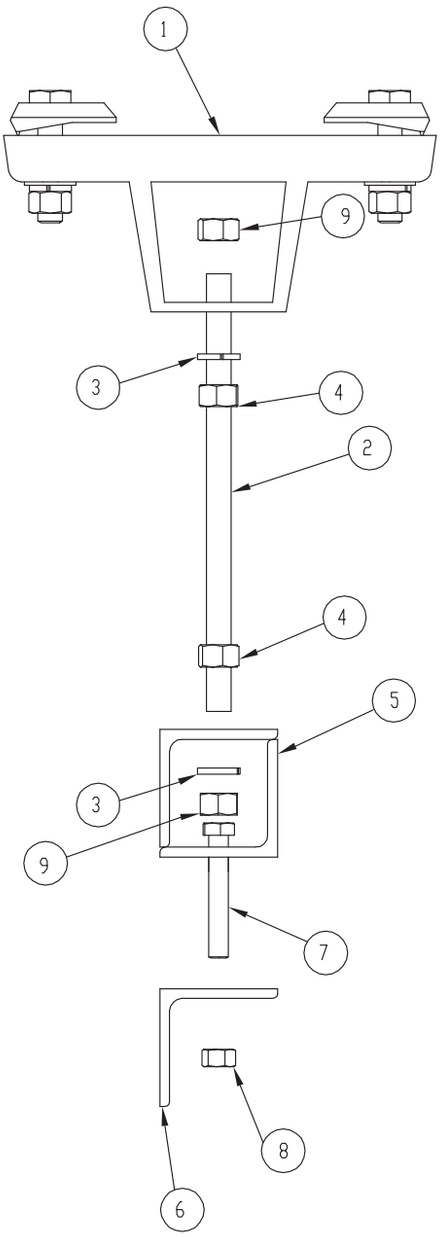

1. (1) BEAM CLAMP, “C-482”
2. (1) TREADED ROD
3. (2) LOCK WASHER
4. (4) HEX NUT
5. (1) HANGER TRUSS BRACKET, “HTB-W”
6. (1) L-ANGLE (2 HOLES), “HTB-1”
7. (2) BOLT, HEX HEAD
8. (2) LOCK WASHER
9. (2) NUT, HEX

SPANCO® Inc.
Promise to perform.

103-0010_rev04_09_rev1:Layout 1 2/9/11 11:23 AM Page 30

AP-10

CEILING MOUNT ROTATING PLAIN TRACK FLUSH MOUNT HANGER

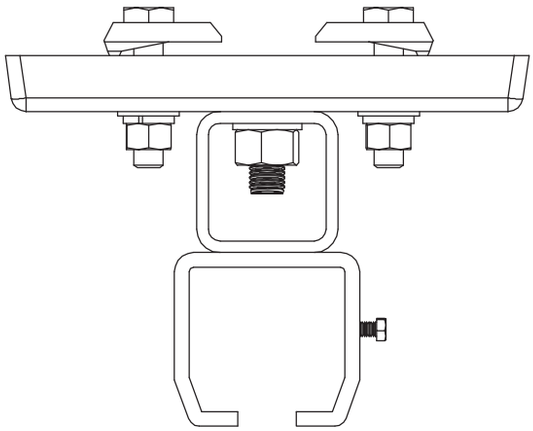

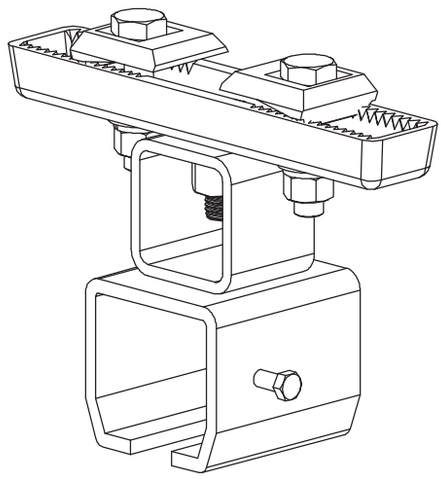

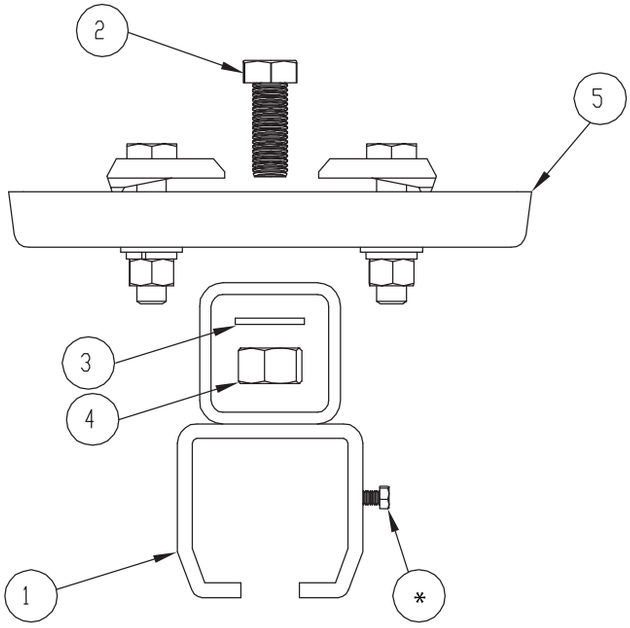

1. (1) PLAIN TRACK HANGER BRACKET, “HB”
2. (1) HANGER HEX BOLT
3. (1) LOCK WASHER
4. (1) NUT, HEX
5. (1) BEAM CLAMP, “C-480”
6. (1) HEX BOLT

NOTES:
TORQUE SPECIFICATIONS
3/4” - 210 FT-LBS

SPANCO® Inc.
Promise to perform.

103-0010_rev04_09_rev1:Layout 1 2/9/11 11:23 AM Page 31

103-0010_rev04_09_rev1:Layout 1 2/9/11 11:23 AM Page 32

SPANCO Inc.
Promise to perform.

SPANCO, Inc.
604 Hemlock Road
Morgantown, PA, 19543

Toll Free: (800) 869-2080
Local: (610) 286-7200
Fax: (610) 286-0085

spanco.com

FIVE-YEAR EQUIPMENT WARRANTY

SPANCO offers this Equipment Warranty (the "Warranty") on the following equipment:

- Manually propelled Free Standing and Ceiling Mounted Workstation Bridge Cranes.
- Manually propelled Monorails.
- Manually propelled ALU-TRACK Bridge Cranes and Monorails.
- Manually rotated Enclosed Track and I-Beam Jib Cranes.
- Manually propelled Gantries.
- Manually propelled Articulating Jib Cranes.
- ALL motorized SPANCO products come with a one year warranty on drive components.

SPANCO warrants the Equipment and wearable end truck and trolley wheels only, to be free from defects in material and workmanship for a period of five (5) years or 10,000 hours (whichever occurs first), commencing on the date of shipment to the first retail purchaser ("Purchaser"). This Warranty does not extend to Equipment which has been subject to misuse, use in excess of rated capacity, negligent operation, use beyond SPANCO's published service factors, improper installation or maintenance, and does not apply to any Equipment which has been repaired or altered without SPANCO's written authorization. Written notice of any claimed defect must be given to SPANCO within thirty (30) days after such defect is discovered. SPANCO's obligation, and Purchaser's sole remedy under this Warranty is limited to, at SPANCO's discretion, the replacement or repair of the Equipment at SPANCO's factory or at a location approved by SPANCO. Purchaser is responsible for all freight and transportation costs relating to the repair or replacement of the Equipment. THE FOREGOING WARRANTY IS EXPRESSLY IN LIEU OF ALL OTHER WARRANTIES WHATSOEVER WHETHER EXPRESS, IMPLIED, OR STATUTORY. SELLER MAKES NO WARRANTY AS TO THE MERCHANTABILITY OR FITNESS FOR A PARTICULAR PURPOSE OF THE EQUIPMENT AND MAKES NO OTHER WARRANTY, EITHER EXPRESS OR IMPLIED. SPANCO shall not be liable, under any circumstances, for any indirect, special or consequential damages including, but not limited to, lost profits, increased operating costs or loss of production. This Warranty shall not extend to any components or accessories not manufactured by SPANCO (such as casters), and Purchaser's remedy for such components and accessories shall be determined by the terms and conditions of any warranty provided by the manufacturer of such components and accessories.

SERVICE POLICY

1. Obtain as much information as possible concerning the problem through personal observation by yourself or other authorized personnel familiar with the job and equipment: include model, serial and/or part numbers, voltages, speeds and any other special identifying features. Be prepared to discuss the situation in detail.

2. All authorized labor charges will be based on straight time. Hourly rates, estimated man hours, and not to exceed total dollar amount required for corrections are to be agreed upon before authorization is given. There will be no allowances for overtime except in dire emergencies and then only with prior approval.

3. A verbal agreement may be reached immediately on both the method of correction and the approximate cost. A warranty authorization number will be assigned for the specific incident. A confirming written authorization will be forwarded to the distributor.

4. The distributor must send an itemized invoice, showing our release number or invoice number and warranty authorization number after authorized corrections have been made. A credit memo will be issued by accounting after the invoice has been received and approved. Warranty charges ARE NOT to be deducted from outstanding open account invoices under any circumstances.

5. Any field corrections made prior to an authorization by SPANCO will not be accepted as a warranty charge or the responsibility of SPANCO. Any modification to the equipment made without the prior approval of the seller will void all warranties. A verbal authorization for modification may be obtained, in which event a warranty authorization number will be assigned for the specific modification. A confirming written authorization will be forwarded to the distributor.

This warranty and service policy will be incorporated as a permanent section of the current price book as issued by SPANCO.